New Zealand Patent 272481 Page 1 of 44 printed on Monday 20th August 2007

272481

Under the provisions of Regulation 23 (1) the Complete Specification has been ante-dated to 9 Nov 1993

Initials

Priority Date(s): 9/11/92

Complete Specification Filed: 9/11/93

Class: (6) A01K15/04

Publication Date: 26 NOV 1996

P.O. Journal No: 1410

NZ PATENT OFFICE 30 JUN 1995 RECEIVED

Patents Form No. 5 Our Ref: DT204849

NEW ZEALAND

PATENTS ACT 1953

COMPLETE SPECIFICATION

LEG RESTRAINT FOR USE IN TREATING OR SHEARING ANIMALS

Divisional out of NZ patent appln no. 250174

filed 9 November 1993

CHANGE OF NAME OF APPLICANT
Australian Wool Research and Promotion Organization

We, **WOOL RESEARCH AND DEVELOPMENT CORPORATION, a body corporate existing under the Primary Industries and Energy Research and Development Act 1989 (Commonwealth) and regulations made thereunder of 369 Royal Parade, Parkville, Victoria 3052, Australia** hereby declare the invention, for which We pray that a patent may be granted to us and the method by which it is to be performed, to be particularly described in and by the following statement:

Aust Patent 272481 Page 2 of 44 printed on Monday 20th August 2007

Field of the Invention

This invention relates to leg restraints for manipulators for use in the treatment or shearing of sheep and other animals, such as goats and other domestic animals. In particular, the invention relates to a leg restraint for use in a manipulator for manual shearing.

Background of the Invention

It is well known that the manual shearing profession as practiced today in Australia has changed little in the past 100 years. Professional shearers still practice their trade by standing on a flat wooden floor and bending over the sheep in unnatural and highly stressful positions to manipulate and gain access to all surfaces of the sheep's body.

The end result is well documented. The physical stress and strain placed on shearers' bodies, day after day, week after week and year after year to achieve high daily tallies in practicing their profession, eventually becomes highly detrimental to their long term physical well being and gradually their financial quality of life. This in turn has a cascading financial effect on both the shearing contractor and the woolgrower through higher worker's compensation costs and the loss of the industry's most qualified shearers to less strenuous fields of employment.

In our Australian Patents Nos 567764 (AU-B-33725/84) and 598697 (AU-B-22059/88) we have described various manipulators for use in the automated shearing of sheep and other like animals. In each case, the manipulator is configured to restrain the animal and to manipulate the legs, head and body of the animal to automatically present various portions of the fleece for shearing by means of an automated shearing head. The manipulators are of complex construction requiring a programmed controller which controls not only the various manipulations but also the movement of the automated shearing head to sever the fleece.

In the current economic climate, there is a need for a less complex semi-

automated mechanism for manipulating a sheep to present the different regions of the fleece for manual shearing in a manner which enables a relatively inexperienced shearer with limited training to shear a sheep in a more efficient and less physically demanding manner. By providing such a manipulator, the long period required to train a shearer to the necessary levels of skill will be considerably truncated and the physical demands placed on the shearer during the sheep handling and manipulating process will be significantly reduced.

Summary of Invention and Object

It is therefore an object of the present invention to provide a leg restraint which can be used in a relatively simple semi-automated manipulator for sheep and other animals, designed to restrain, stretch and present the fleece of the sheep to the shearer during a manual shearing process.

The invention provides an animal leg restraining means comprising leg engaging means for partly enclosing a leg in use, pivoted clamping means for blocking movement of said leg from engagement with said leg engaging means, one-way means for allowing pivotal movement of said pivoted clamping means in a direction towards said leg engaging means, and means for releasing said one-way means to allow pivotal movement of said pivoted clamping means away from said leg engaging means to facilitate release of the leg of the animal.

In one preferred form of the leg restraining means, the one-way means comprises a wrapped spring clutch means and said releasing means comprises a sleeve rotatably mounted on said spring clutch in such a manner that rotation of said sleeve means in a predetermined direction causes release of said spring clutch to allow pivotal movement of said clamping means away from said leg engaging means.

(followed by page 3a)

Item Patent 272481 Page 3 of 44 printed on Monday 20th August 2007

272481

Patent 272481 Page 4 of 44 printed on Monday 20th August 2007

In our New Zealand specification 250174, from which this application has been divided, there has been described and claimed an animal manipulator comprising an animal support means for supporting the animal on its back along narrow generally parallel regions of support, drive means for moving said regions of support to rotate the body of the animal about a generally central longitudinal axis, means for restraining the rear legs of the animal in a rotatable manner on a rear turret carried by a swinging arm, means for restraining the front legs of the animal in a rotatable manner on a front turret, means for restraining the head of the animal in a rotatable manner attachable to said front turret, front swing arm means carrying means for releasably attaching the front leg restraining means and the head restraining means, said swing arms being pivotable to predetermined angular positions with respect to the support means, and programmable control means for causing predetermined movements of said parallel support regions and rotation of said front and rear leg supports and said head support, which, in conjunction with movement of said front and rear swing arms, manipulates the body of the animal to expose various portions of the animal for desired treatments.

In one form of the manipulator, the programmable means causes the drive means to operate in predetermined directions for predetermined times to cause rotation of the body of the animal, and at the same time causes driven rotation of said front and rear leg

(followed by page 4)

272481

restraining means to manipulate the body of the animal in a predetermined manner, said control means being operable in a stepwise manner under the control of an operator, said front and rear swing arms being movable by the operator to predetermined indexed positions at which indexed positions said front and rear swing arm means are restrained in a manually releasable manner to present different parts of the body of the animal to the operator for desired treatment.

In a more sophisticated form of the manipulator, the front and rear swing arms are also driven to the predetermined indexed positions under the control of the programmable means to effect desired manipulations of the body of the animal.

The front and rear turrets are preferably supported on longitudinal tracks on a frame which also supports the animal support means, and the turrets are either manually movable along tracks or driven by some suitable means to adjust the positions of the front and rear turrets to accommodate animals of different lengths, and to stretch the body of the animal to both restrain the animal and condition its skin for desired treatments.

It will be appreciated from the above that the manipulator embodying the invention of NZ 250174 enables a manual shearer to automatically initiate the necessary rotary motions to cause sheep body rotation as well as rear leg rotation and front leg and head rotation, as well as enabling stretching of the restrained sheep by movement of the front and rear turrets with respect to the supporting frame. Each of the shearing positions desired is programmed into the programmable controller to respond to the operator actuating either a foot switch or a manual input button to initiate the next sequence of motions to place the sheep rotationally in the next position desired for continuing the shearing process.

While in the preferred embodiment of NZ 250174 described in greater detail below the transfer of either of the front legs and/or the head to their appropriate front swing arms, and the swing rotation of the rear legs is presently performed manually, these motions may also be automated in a manner similar to the rotational movements. All of the automated motions, as well as a number of associated motions (such as rotating the sheep support rollers simultaneously with the two end turrets, either as

required or to the next front swing arm docking position) can be initiated by the use of specific manual input buttons to allow the operator maximum flexibility. The programmable controller is able to hold a number of alternative shearing sequence strategies, although only one program would be used repetitively on a number of sequentially loaded sheep.

As will become apparent from the description of the preferred embodiment of the invention of NZ 250174, the manipulator according to that invention has been primarily designed for the restraint and manipulation of a sheep during manual shearing operations. However, the invention is equally applicable to the restraint of other animals, such as goats, or other animals requiring veterinary and other treatment requiring restraint and manipulation of the animal. Similarly the leg restraint of this invention can be used for those purposes.

The head restraint of the manipulator of NZ 250174 may take any suitable form, but is preferably in accordance with the preferred embodiment described in divisional application, NZ 272480.

The head restraint of NZ 272480, comprises a supporting frame, a pair of pivoted arms carried by said supporting frame and having eye covering cups and head engaging means at their free ends, restraining means for preventing movement of said pivoted arms from their head engaging position, a pivoted lower jaw engaging arm carried by said frame means and having jaw engaging means thereon, upper jaw or nose engaging means carried by the frame in opposed relation to the lower jaw engaging means detente means for preventing movement of said lower jaw engaging arm from its jaw engaging position, and release means for simultaneously releasing said restraining means and said detente means to enable quick release of head engagement by said restraint.

(followed by page 5a)

PATENT OFFICE

Patent 272481 Page 6 of 44 printed on Monday 20th August 2007

272481

In one presently preferred form of the NZ 272480 invention, the restraining means comprises an arcuate gear segment having fine serrations engaged by spring loaded pawl means to prevent opening movement of said eye cup arms, said release means comprising a pivoted lever engaging said pivoted pawl means to pivot said pull

(followed by page 6)

PATENT OFFICE

272481

means away from said serrations to release said arms. The detente means preferably comprises serrations formed in a cylindrical surface carried by the lower jaw engaging arm at its pivot and a spring loaded ratchet pawl preventing reverse movement of the lower jaw engaging arm, said release means being positioned to forcibly disengage said ratchet pawl from said serrations to simultaneously release said lower jaw engaging arm when said eye cup arms are released.

The provision of a single release means for releasing both the eye cup arms and the lower jaw engaging arm greatly simplifies the release of the head restraint and facilitates the possibility of automated release of the head restraint if desired.

The front and rear leg restraining means of the manipulator of NZ 250174 may take any suitable form, but one preferably in accordance with the presently preferred embodiment described above. The leg restraining means constitutes an improvement over the leg restraining means disclosed in our earlier Patents and may be used with restraining and manipulating means other than in accordance with the NZ 250714 invention.

Brief Description of the Drawings

In order that the invention may be more readily understood, one presently

alent Patent 272481 Page 6 of 44 printed on Monday 20th August 2007

preferred embodiment of the invention will now be described with reference to the accompanying drawings in which,

Figure 1 is a plan view of a sheep manipulator embodying the invention;

Figure 2 is a side elevation and corresponding end elevation of the manipulator of Figure 1;

Figure 2A is a corresponding end elevation of the manipulator of Figures 1 and 2;

Figure 3 is an enlarged detail side elevation of the front turret showing its mounting on the supporting frame;

Figure 4 is a part sectional end elevation of the front turret on the line 4–4 in Figure 3;

Figure 5 is a fragmentary sectional plan view of the front swing arm and associated indexing mechanism;

Figure 6 is a detailed sectional side elevation of the front swing arm indexing mechanism on the line 6–6 in Figure 5;

Figure 7 is a part sectional side elevation of the rear swing arm on the line 7–7 in Figure 1;

Figure 8 is a sectional plan view of the rear swing arm on the line 8–8 in Figure 7;

Figures 9 and 10 are perspective views of the rear leg clamp mechanism and the front leg clamp mechanism means respectively;

Figure 11 is a side elevation of a head clamp for use with the invention;

Figure 12 is a sectional plan view on line 12–12 in Figure 11 showing the eye cup mechanism;

Figure 13 is a sectional plan view on line 13–13 in Figure 12 of the head clamp showing the lower jaw clamping mechanism;

Figures 14 to 24 show the manipulator in plan view with a sheep restrained and manipulated to its various shearing positions;

Figure 25 is a side elevation of a further automated manipulator embodying the invention;

aapm Patent 272401 Page 9 of 44 printed on Monday 20th August 2007

Figure 26 is a plan view of the manipulator of Figure 25 schematically showing the extreme positions of the front swing arms;

Figure 27 is a sectional plan view on the line 27–27 in Figure 25 showing the front swing arm operating mechanism;

Figure 28 is a sectional plan view through the front turret showing one of the docking mechanisms;

Figure 29 is a sectional plan view similar to Figure 28 showing the docking mechanism in the released position;

Figure 30 is an elevation on the line 30–30 in Figure 25 illustrating the front turret docking mechanisms;

Figure 31 is a perspective view of the docking mechanism of Figures 28 to 30;

Figure 32 is a perspective view of the front turret plate;

Figure 33 is a sectional elevation along the line 33–33 in Figure 26 showing the drive roller details and

Figure 34 is a sectional elevation along the line 34–34 in Figure 33 showing the modified roller detail.

Description of Preferred Embodiment

The simple semi–automated sheep manipulator shown in Figures 1 and 2 of the drawings has been designed to restrain, stretch and present the various portions of the fleece of the sheep to the shearer during a manual shearing process.

Coupled with an effective sheep loading system, the manipulator could be incorporated into a fully automated, multi–stand, sheep manipulation and wool handling system. Installed on a trailer, the rig could be transported by truck to individual woolgrowers properties, similar to the way contractors currently move commercial crutching rigs from farm to farm. Analysis of existing manual shearing practices indicate that shearers as well as both shearing contractors and woolgrowers could gain major benefits from the utilization of such a mobile manual shearing rig in the wool harvesting industry.

From the shearer's viewpoint, the need to physically drag the sheep from the

holding pen as well as manually restrain and manipulate the sheep during shearing is completely done away with. Shearers no longer need to experience a life long deterioration in their quality of life in order to practice their profession. Utilization of the concept allows shearers to focus on what they are being paid to do, remove all the wool from the sheep with a minimum of skin and second cuts.

From the contractor's perspective, the system enables the operator to easily remove the belly, hocks and any stained or contaminated wool as an initial step of the overall shearing process. Combined with an option for operator classing, this leaves the path open for automatic wool handling and pressing, thereby substantially reducing contractor manpower costs. In addition, there may be significant savings in worker's compensation costs through the alleviation of operator occupational abuse, compared with conventional shearing methods. The contractor may also be able to provide additional sheep husbandry services to the wool grower while the sheep is still restrained in the manipulator, saving the wool grower substantial time in the future to remuster his sheep and perform seasonal husbandry tasks himself.

Wool growers should benefit financially from reduced contractor shearing costs, reduced second cuts, removal of any contamination at the source and improved classing of their wool There may also be some hidden cost savings in not having to accommodate and feed as many people on their properties during the wool harvest.

In regards to wool harvesting industry in general, the technology should encourage more people to enter the industry by greatly reducing the learning curve for beginners, enabling them to become productive shearers in a relatively short time span, compared to current learning methods of requiring manual sheep restraint. Furthermore, the technology may prove very valuable in the near future, should recent government moves to change occupational health, safety & welfare Acts regarding manual handling regulations be reactivated.

Referring firstly to Figures 1 and 2 of the drawings, the manipulator comprises a support frame 1, which may take any suitable form, including forms which enable it to be transported from one shearing site to another, or relatively

fixed in one shearing shed, said frame 1 pivotally supporting a rear swing arm assembly 2, front swing arms 3, a front turret assembly 4, a rear turret assembly 5 on the rear swing arm assembly 2 and a pair of parallel motor driven support rollers 5. The front turret 4 supports front leg clamp means 6 and 7 on a rotatable support driven by motor M2 through a drive system (not shown). The leg clamps 6, 7 are independently dockable to the front swing arms 8 and 9 forming part of the swing arm assembly 3. The rear turret assembly 2A carries a rear leg clamp assembly 10 on a rotatable support 11 driven by motor M1 through a suitable drive system (not shown), and the rear turret assembly 2a is mounted on linear bearing tracks 12 to allow the position of the rear turret to be adjusted and clamped in position by clamp means 13 to suit various lengths of sheep.

The rear swing arm 2 pivots about axis A1 to 20° to either side of the central axis. The swing arm 2 is held in its central position and each of its 20° swing positions by a detente mechanism released by a foot release lever 35 as will be described in greater detail below. The front swing arms 8 and 9 each pivot independently about axis A2 through 20°, 60° and 117° from their central positions for sheep loading and unloading or redocking of the leg clamps 6, 7 to the swing arms 8, 9. Lever A releases the swing arm 8 while lever B releases the swing arm 9. Alternatively, hand releases may be provided on the swing arms 8 and 9.

The front turret assembly 4 is mounted on horizontal linear slide bearings 15 to allow for sheep of different lengths. Likewise, the two front swing arms 8 and 9 each have vertical slide assemblies item 1X and 2X which carry front leg or head clamp transfer mechanisms 6 and 7 and each of which are similarly mounted on horizontal slide assemblies 3X and 4X. The linear bearing tracks 12 and 15 may be used to stretch the sheep when its legs are suitably clamped, and a small switch is provided in the front turret to allow the operator to position the front turret in a nominally stretched position followed by release of the front leg clamps 6, 7. A foot pump lever 16 is provided to pump hydraulic fluid to automatically release the front leg clamps 6, 7 in a manner to be described further below. As described further below, a particularly preferred form of the invention includes common clamping

Patent 272401 Page 12 of 44 printed on Monday 20th August 2007

272481

New Zealand Patent 272481 Page 10 of 44 printed on Monday 20th August 2007

means for the front turret slide 15 and vertical slide assemblies 1X and 2X to be described below.

Cabinets C1 and C2 are provided to contain the programmable controller and the necessary power relays and other electricals for the rollers 5 and the other drive motors M1 and M2. As mentioned above, the programmable controller controls the motor driven rollers 5 and the motors M1 and M2 to control rotation of the sheep's body, and the swing arms 2, 7 and 8 are manually manipulated by the shearer. In the next stage of development of this manipulator, the movement of the swing arms 2, 7 and 8 to their desired indexed positions will almost certainly be controlled by the programmable controller, although the necessary prompts for rotation and indexing of the swing arms will be likely to be input by the shearer.

Referring now to Figures 3 and 4, the front turret 4 comprises lower carrier plates 17 supporting linear bearing members 18 engaging the linear tracks 15 on the frame 1, a clamp mechanism 19 for locking the front turret 4 in any desired longitudinal position, a drive motor M2 and gear box 20 and a timing sensor disk 21 fitted with twin magnets at 180° centres to allow for automatic positioning of the front turret for transfer docking of the front swing arms 8, 9 and twin Hall effect sensors 22 for sensing the twin magnets in the disk 21 to allow for position sensing irrespective of direction of rotation. If desired, the manual clamp 19 may be replaced by an hydraulically released clamp to allow for the common release and relocking of the front swing arms and the front turret slide as a combined assembly.

Referring now to Figures 5 and 6 of the drawings, each front swing arm 8, 9 is mounted on its own bearing B1, B2 for swinging movement to any one of three positions from the rest position, as shown most clearly in Figure 5 of the drawings. Each arm carries a spring biased pivoted locking bar 25 having an end collar 26 held by spring 27 in engagement with locating slots 28 in the edge of a part circular plate 29 secured to frame 1. The plate 29 has semi-circular cams 30 which are positioned to engage the collars 26 of the locking bars 25 to disengage the locking bar collars 26 from the index slots 28. Release is achieved by operating the release levers A and B in the directions of the arrows in Figure 5 to cause the cams 30 to push the

272481

locking bars 25 out of the index slots 28 when movement of the arms 8 or 9 is required. When the swing arm 9 carries the head clamp, as described further below, movement beyond the 60° index slot 28 is prevented. The manipulations performed by pivotal movement of the swing arms 8 and 9 about their bearings B1 and B2 to each of the index positions defined by the slots 28 will be clear from the description relating to Figures 14 to 24.

Turning now to Figures 7 and 8 of the drawings, the rear swing arm 2 is mounted on a bearing 31 defining the pivot axis A1 and an index plate 32 is positioned under the arm 2 and is formed with three index notches 33 engaged by a spring biased pivoted locking bar 34 which engages each of the index slots 33 to hold the swing arm 2 in a central position or either of its indexed positions 20° to either side of the central position. As shown in Figure 2 of the drawings, the locking bar 34 is fitted with a foot release lever 35 which enables the operator to release the locking bar 34 against the action of the spring 36 to allow swinging movement of the swing arm 2 to either of its indexed positions.

As shown in Figures 1 and 2 of the drawings, the rollers 5 each comprise a standard proprietary motorized drum roller carrying a molded ribbed sleeve 38, only part of which is shown in Figure 9, to assist in sheep rotation. The length of each roller 5 may be extended by up to 200 mm, as shown in Figure 9 of the drawings, to accommodate sheep falling within various length parameters.

Figure 9 of the drawings shows the currently preferred rear leg clamp assembly 10, which comprises a pair of inverted hooks 40 carried by side plates 41, under which the rear legs of the sheep are engaged. The rear legs are clamped in position in the hooks 40 by a pair of hock retainer arms 42 carrying hock engaging plates 43 dimensioned to fit within the inverted hooks 40. The arms 42 are carried by a common pivoted shaft 44 pivoted in bearings carried by the side plates 41 as shown in Figure 10. A quick release one-way clutch 45, such as a Warner PSI-5-CCW spring clutch, operates to allow movement of the arms 42 towards the inverted hooks 40 until the clutch is released by rotation of an outer knurled sleeve 46 which loosens the spring mechanism and allows the ends of arms 42 to rapidly drop from

aldna Patent 272481 Page 14 of 44 printed on Monday 20th August 2007

272481

their clamped positions, pivoting about the axis of 44. The sleeve 46 may be turned manually or by the suitably operated hydraulic mechanism referred to above (not shown) to allow quick release of the rear legs of the sheep.

The front leg clamp mechanism 6, 7 includes similar independent leg clamps mounted on docking means 50 adapted to engage co-operating means on the front swing arm assembly and the front turret 4. Each front leg clamp comprises an inverted hook 51 carried by a side plate 52 and a pivoted clamping arm 53 having a shaped leg engaging portion 54 shaped to enter the inverted hook 51 in the manner shown in the drawings. A spring clutch 55, similar to the clutch 45, is associated with the arm 53 and has a quick release sleeve 56 to enable rapid release of the front legs of the sheep in either of the ways mentioned in relation to the rear leg clamps 10.

Referring now to Figures 11, 12 and 13 of the drawings, a head clamp 60 for restraining the head of the sheep during the manipulation operations is shown. The head clamp comprises a pair of side plates 61 carrying a top plate 63 to which shaped side arms 62 and a pair of arms 64 carrying eye cups 65 are directly or indirectly pivoted as shown. Each eye cup 65 includes a projection 66 which is dimensioned to engage a skull cavity behind the eyes of the sheep in a manner described in more detail in our earlier Patent No 595129 (AU-B 20664/88) to positively restrain the head of the sheep in a manner which the sheep finds quite comfortable and soothing.

A rear support 67 carries a pivot 68 for a lower jaw support arm 69 which terminates in a shaped jaw engaging pad 70. Overlying the arm 69 and pad 70 is an arm 70a carrying a nose pad 70b the arm being rigidly attached to the top plate 63. A serrated circular ratchet 71 surrounds a uni-directional needle bearing 5X (Fig 13), rotating on a hardened cylindrical sleeve 6X mounted on pivot 68. A torsion spring 7X holds a ratchet pawl 72 against a stop face in the circular ratchet 71 so that as the arm 69 (which is attached to the cylindrical sleeve 6X) is raised, the uni-directional needle bearing 5X prevents reverse motion of the arm 69 while the outer race of bearing 5X is held from clockwise rotation (as shown in Fig 12A)

by the engaged ratchet and pawl. In this way the lower jaw of the strip is fully supported by a jaw clamp pad 70 on the arm 69 with the sheep's nose being held against pad 70b. When the pawl 72 is forcibly disengaged from the ratchet 71 by means of the release lever and cam 73, then the lower jaw clamp 70 is released at the same time as the eye cups 65.

The eye cup arms 64 are formed with meshing gear teeth 75 and one of the arms has an extension 76 which carries a toothed ratchet quadrant 77 having fine serrations and which engage one of two spring loaded pawls 78. There are two pawls, one above the other with differing lengths equal to half the pitch of the ratchet segment. This allows for a finer more robust adjustment. The pawls 78 have teeth 79 which engage the ratchet teeth on the quadrant 77. Each pawl 78 is carried by a pivoted lever 78a which can be rotated to its released position by lever 73 which engages the operative end 80 of the pawls 78 in a manner shown most clearly in the enlarged detail of Figure 12. When lever 78a is rotated in an anticlockwise direction to its operative position it places the pivots of the two pawls 78 to a supported overcentre position to the left of the line joining the tooth tip 79 and the pivot of lever 78a thus making the ratchet operative. Thus, by actuating the single lever 73, both the eye cup arms 64 and the lower jaw support arm 69 are released from engagement with the head of the sheep.

The shearing sequence to be described further below requires the head and/or front legs restraint means to be transferred between the front turret 4 and the front swing arms 8, 9 from time to time. In order to engage the front swing arm transfer locks 6 and 7 between the front turret assembly and the swing arms, they must be in longitudinal alignment. This is achieved prior to using the equipment by firstly unlocking the front turret assembly 4 and the anchor points of the horizontal slides on each front swing arm from their respective linear slide rails (ie leaving them all free to slide) as well as fully retracting the small electric linear actuators on each swing arm 8 and 9 (which are used for stretching the front legs and or the neck of the sheep when such are attached to the swing arms) so that they are in a known relative position to their respective actuator anchor points (this situation must be true

at any time that the vertical slide assemblies 1X and 2X are re-docked to the turret). Now each of the horizontal axes of the front swing arm vertical slide assemblies 1X and 2X and the front turret assembly 4 are parallel to each other when the front arms 8 and 9 are docked to the front turret. This allows the free longitudinal movement of the combined front swing arm vertical slides and the front turret assembly to suit the specific length of the sheep being loaded. Note that the front swing arm vertical slide assemblies are in a nominal docking alignment only and are NOT actually docked during sheep loading as the sheep's head and fore legs are at this time entirely attached to the front turret which is now in a horizontal plane for loading and not the necessary vertical plane for docking and transfer. It is functionally possible to swing the two front arms 8 and 9 into a nominal docking position (ie parallel to the front turret slide) while the turret is horizontal providing that the vertical slides on each arm are in a fully dropped position (each of these vertical slides has three vertical position stops – the top one aligning with the top fore leg transfer when uppermost, the middle position aligning with the main turret axis for head transfers and the lower one to drop a swung fore leg to stretch the shoulder skin during shearing – this latter position drops the vertical slide clear of the horizontal turret during preload or loading etc). In order to hold this nominal docking alignment magnets (not shown) can be used to hold the respective swing arms 8, 9 parallel to the front turret axis with a tapered alignment pin secured to each vertical slide assembly being inserted into a matching hole either side of the front turret slide assembly plates 17. Thus in the above described situation we can freely move both of the front swing arm vertical slide assemblies with the front turret all in a nominally docked alignment whether there is a sheep in the cradle or not so long as their respective clamps remain unlocked.

A docking mechanism 81 (Fig 11) is carried by the side arm 62 and the top plate 63 is pivoted to the side arms 62 about axis E while a pin F carried by plates P attached to the top plate 63 slides in a groove G in the side arms 62 to allow the head clamp 60 to pivot about the axis E through about 45°. As shown clearly in Fig 11A, each docking mechanism 81 consists of a rotatable key pivoted at the top of

each vertical slide arm on each front swing arm 6, 7. Each foreleg clamp arm and the head clamp assembly have identical pivoted inserts with recesses to match the above keys in 6 and 7. The keys and inserts are limited to 90 degrees of rotation with appropriate stops. Each side of the rotating insert (in either of the fore leg arms or the head clamp) has a pair of external lugs on a common axis such that the lugs on one face are phased 90 degrees to the lugs on the opposite face. When a swing arm is docked with either a fore leg arm or a head clamp the pivoting key enters the pivoting insert and rotates it 90 degrees so that the outer lugs disengage from holding the fore leg clamp to the turret while simultaneously engaging the lugs on the opposing side to lock the fore leg clamp or head clamp to the vertical slide. This locking means is used to hold one assembly to the other axially while separate lugs on each assembly carry the longitudinal and twisting forces which may be applied.

As mentioned previously, a preferred feature of the manipulator is that it has a common clamping means for the three slides 15, 1X and 2X on the front turret 4. This is achieved by normally having all three slides clamped rigidly to their respective rails using disc springs to apply the required clamping force. A common hydraulic circuit is used to apply sufficient force in a small cylinder fitted to each clamp in order to release the disc springs and allow free longitudinal movement of the slides. The oil pressure is held by a non–return valve so that they remain unclamped until the pressure is released. This is done by means of a small electric switch mounted on the front turret assembly handle and connected to a small solenoid valve connected in parallel to the non return valve so that once a sheep is loaded the operator may nominally stretch the sheep with a single push of the handle on the front turret assembly (which carries the two undocked front swing arm vertical slides with it), and, when satisfied with the stretch position the operator presses the switch and all three slides lock instantly to their respective rails. In the case of the front turret this is absolute, while in the case of the two swing arms, the vertical slides may be extended by small electric actuators providing that they are again fully retracted for re–docking. Note further that both front swing arms must

be swung clear of the front turret (when the sheep is fully secured to the front turret as when first loaded) before any rotation of the front turret can take place. The reason why magnets were used was to facilitate the quick re-positioning of the front swing arms for this purpose without having to reach for the release levers A and B. When a shearing cycle is finished the operator returns the swing arms 8 and 9 to a nominally docked position (the front turret is again horizontal) prior to unloading the sheep and releasing the three front slides with the hydraulic pressure circuit. By this means the vertical slides always remain in a docking alignment irrespective of the position the front turret on its horizontal axis as dictated by differing sheep lengths.

Referring now to Figures 14 to 24 of the drawings, the sheep is positioned upside down on the rollers 5 (Figs 1, 2) followed by the placement of the rear legs in the quick release leg clamps 10, 40, 43 (Fig 10), located on the rear turret 2A. The sheep's head is then placed in the quick release head clamp 60 (Figs 12, 13) located on the front turret 4, followed by the restraining of the front legs in clamps 6, 7, 51, 54 (Fig 11).

The head clamp 60 utilizes its pair of eye cups 64 with small protruding lugs 66, that fit easily into skull depressions just behind the sheep's eye sockets. The arms 64 holding the eye cups 65 are moved in to engage with the skull and a mechanical locking mechanism 77, 78 (Fig 13) prevents them from being separated until the animal is finally released. As a result, the sheep's head is rigidly held without obscuring any wool on the head but in a comfortable way that blindfolds the eyes, causing the sheep to relax during shearing.

Both the front and rear turrets 4, 2A are each mounted on a linear ball bearing track 15, 13 with lever or hydraulically actuated clamps that enable the shearer to freely slide either one when positioning sheep of different lengths longitudinally on the manipulator. In the normal loading sequence, only the front turret 4 would need to be moved to stretch the sheep's body longitudinally and locate its head in a preferred position consistent with the sheep's brisket longitudinal location. Extensive manual shearing trials using the manipulator have achieved loading/unloading times totalling an average of 15 to 30 seconds.

aldrid Patent 272481 Page 12 of 44 printed on Monday 20th August 2007

A shearing pattern has been developed to enable the fleece to be shorn off in one piece onto a gathering board or conveyor belt (not shown). Ease of access to all segments of the sheep's body is accomplished by rotating the sheep's body 360° and firmly stretching its legs and neck during the semi-automatic rotation process.

Shearing begins on the belly with the sheep resting upside down on the rollers (Fig 14). The shearer removes the belly patch, then shears off any stained wool from the legs and crutch. At this point the shearer begins to open up the fleece along the side of the sheep, above the belly, by making long blows from the front legs to the rear legs (Fig 15). As the shearing progresses up the sheep's near side to it's back (Figs 15, 16, 17), gravity causes the fleece to peel off in one piece onto the gathering board. This part of the shearing process is assisted by first pivoting the rear swing arm 2 to the left (Fig 16) and then to the right (Fig 17) to condition the skin of the sheep on either side to facilitate easier shearing. During the process, the sheep is rotated onto it's side (Fig 18) by the shearer pressing a foot activated control pad (not shown) on the floor which causes the controller in cabinet C1 to rotate the rollers 5 in the required direction. The rear swing arm 2 is left in the position shown in Figure 17 to expose the inside of the right leg, and is then returned to the central position (Fig 19) to prepare the sheep for the next position.

Once the shearer reaches the middle of the back, the neck is then repositioned (Fig 20) along with the top front leg to shear the underside of the neck. This is accomplished by physically rotating two swing arms 8, 9 to which the head and top leg clamps have been transferred from the front turret 4 via simple docking transfer/locking mechanism (Figs 11 and 12). By rotating the swing arm 8, the upper front leg is rotated about the brisket through an angle of approximately 120 degrees and lowered slightly. In rotating the swing arm 9, the head and neck are rotated through an angle of approximately 60 degrees and the swing arm 9 is locked in position (Fig 21).

During the swing arm rotation process, both the neck and front leg are stretched slightly to minimise skin wrinkles in the neck area. The shearer can now easily shear between the front legs and most of the neck area.

Patent 272481 Page 20 of 44 printed on Monday 20th August 2007

When the shearing of the neck has been completed, the head and front leg swing arms, are rotated back to their respective starting positions and once again docked with the front turret 4. The shearer then transfers the front leg and head restraint clamps back to the front turret 4, using the transfer/locking device Fig 22.

The sheep is now ready to be rotated to the next shearing position (Fig 23) where it ends up resting on its belly. Once in this position, the shearer removes the wool from the remainder of the sheep's back, head and back of the neck and then starts to shear the far side. Half way down the far side, the sheep is again rotated if desired (not shown) until it comes to rest on it's near side. The shearer can then remove all the remaining wool, thus enabling the fleece to fall off in one piece on to a gathering table or conveyor belt for ease of final skirting and classing. With shearing now complete, the sheep is rotated once again onto its back (Fig 24) for quick unloading, by releasing the head clamp 60 by means of lever 73 and front and rear leg clamps by rotation of sleeves 45 and 55 either manually, hydraulically or otherwise.

With about 3 days of training and practice, a professional shearer should be able to achieve shearing cycle time ranging from 2 to 3.5 minutes, depending on sheep type and their physical condition.

It will be appreciated from the above that the sheep manipulator described above provides a convenient semi-automated mechanism for manipulating a sheep which is capable of use by relatively inexperienced shearers with limited instruction to properly shear the fleece of the sheep in a single piece with less physical effort and skill than is required for normal manual shearing. A number of the functions presently performed manually by the operator may be automated, although the present degree of automation is believed to be about right having regard to limiting the complexity and cost of the mechanism.

It will also be appreciated that a number of the mechanisms described above are capable of being used with a more fully automated animal manipulator, such as those described in our earlier Patents referred to above. Similarly, many of the mechanisms described are also capable of use with manipulators of the type

aidnu Patent 272481 Page 21 of 44 printed on Monday 20th August 2007

272481

Patent 272481 Page 22 of 44 printed on Monday 20th August 2007

described by other workers in this field having varying degrees of automation and complexity.

Referring now to Figures 25 to 31 of the drawings, a further automated embodiment of the manipulator embodying the invention will now be described. In this embodiment, all of the significant functions of the manipulator according to the previous embodiment which were manually executed by the operator are now automated. The remaining manual operations are the application and release of the rear leg restraint clamps, the fore leg restraint clamps, the head clamp eye cups, the jaw clamp, the rear swing arm pivoting the rear turret stretch and the front turret positioning complete with the linear slides on the two front swing arms.

The manipulator shown in Figures 25 to 34 is similar in construction to the previous embodiment and includes a frame 100 pivotally supporting a rear swing arm assembly 102, front swing arms 103, a front turret assembly 104, a rear turret assembly 105 on the rear swing arm assembly 102, and a pair of parallel motor driven support rollers 106.

The front swing arms 103 comprise a near swing arm 107 and a far swing arm 108 (Fig 27) each mounted for pivotal movement on an inclined pivot shaft 109, 110 mounted on the frame 100 in the positions shown in Figures 25 and 26 of the drawings. The near swing arm 107 carries the near fore leg clamp 111, while the far swing arm 108 carries the head clamp 112. The arms 107 and 108 are moved simultaneously by a linear actuator 113 (Figures 25 and 27) which rotates the far arm 108 through 60° and simultaneously rotates the near arm 107 through 120° by the use of gearing 114.

The inclination of the pivot shafts 109, 110 is such that the arms 107, 108 are essentially horizontal when they are parallel to the axis of the frame 100, and as the arms 107, 108 are rotated, they become lower at the ends of each arm and tilt sideways to stretch and condition the shoulder of the sheep for efficient shearing. The pivot shaft 110 is positioned behind the pivot shaft 109 to enable straight spur gearing 114 to be used to drive the arm 107 and to permit a single actuator 113 to be used to achieve the 60° rotation of the arm 108.

The front turret 104 and the docking mechanism of the front swing arms 107, 108 have been redesigned to permit the turret 104 to rotate while the front swing arms 107, 108 are parallel to the longitudinal axis of the manipulator frame 100 and the docking mechanisms are in engagement with the front turret assembly 104.

Referring more particularly to Figures 25 and 28 to 32, the turret assembly 104 comprises a turret member 115 having arcuate T slots 116 in its rear face and formed with cut–outs 117, 118 into which the docking mechanism 119 for the head clamp 112 and the docking mechanism 120 for the near fore leg clamp 111 are located.

Each of the docking mechanisms 119, 120 is kept in sufficient alignment with the turret 115 by means of tapered pins 121, shown most clearly in Figures 28 and 29. The tapered pins 121 are attached to the docking mechanisms 119 and 120 and engage in free fitting matching tapered holes 122 in a clamping plate 123 which is kept in angular alignment with the turret 115 by means of a key 124.

The swing arms 107, 108 have upper end portions 125, 126 which carry plates 127, 128 which in turn carry rollers 129 (only one of which is shown associated with the head clamp docking mechanism) which revolve within the T slots 116 in the turret 115 and in the matching T slots in the head clamp docking mechanism 119 and the near fore leg docking mechanism 120 respectively, which are clamped in alignment to the turret 115 by the clamping plate 123 which holds them to the turret 115 with sufficient force to prevent the sheep from pulling them clear of the face of the turret 115.

When the docking mechanisms 119, 120 are clamped to the turret 115, the clamp plate 123 is in contact with clamping pawls 130 so that the pawls 130 are pulled clear of the gap between the rollers 129 leaving the turret 115, with attached head clamp 112 and near fore leg clamp 111 free to rotate.

When it is desired to swing the arms 107, 108 and their respective end portions 125, 126 away from the turret 115 with their clamps 111, 112, the clamp plate 123 is axially displaced as shown in Figure 29 to release the docking assemblies 119, 120 from the turret 115. In this situation, the docking assemblies

272481

119, 120 are prevented from rotating free of their swing arm portions 125, 126 by engagement between the pawl 130 and the rollers 129 to prevent the clamps 111 and 112 rotating relative to the arm plates 127, 128. Suitable actuator means (not shown) operates the clamping plate 123 which in turn operates the pawl 130 in the manner described above.

It is necessary to position the front turret assembly 104 and the swing arm end portions 125, 126 to suit the length of the sheep being loaded into the manipulator. The swing arm docking mechanisms 119, 120 are able to remain engaged with the turret 115 during loading and a hand release lever 131 and associated gripping bar 132 are provided on the front turret 104 (Fig 25) enables release of the three slide mechanisms when the swing arms 107, 108 are parallel to the slide axis of the front turret assembly 104. The handle 131 raises a link 133 against the action of a spring (not shown) so that a lever 134 disengages a pin 135 from one of the slots 136 to allow adjustment of the slide mechanisms.

In the present embodiment, the rollers 106 are preferably formed from extrusions and incorporate internal and external ribbing and slots 137, 138. The internal ribs 137 will provide driving "keys" for a drive disk 139 (Fig 33) keyed to the output of an internal drive motor 140 to rotate the roller. The external T slots allow various molded sleeves 139 to be keyed to the rollers to change the longitudinal profile of each roller as an aid to gripping the sheep for rotation.

The manipulator according to the above embodiment is otherwise similar in operation to the previously described manipulator with the exception that the number of manual operations required to be performed by the operator are reduced and the manipulator is therefore more automated. The manipulator operates to manipulate a sheep or other animal restrained by the manipulator to the positions shown in Figures 14 to 24 to enable manual shearing to be achieved in a total time of the order of 2.5 minutes including loading.

Patent 272481 Page 23 of 44 printed on Monday 20th August 2007

WHAT WE CLAIM IS:

1. An animal leg restraining means including leg engaging means for partly enclosing a leg in use, pivoted clamping means for blocking movement of said leg from engagement with said leg engaging means, one-way means for allowing pivotal movement of said pivoted clamping means in a direction towards said leg engaging means, and means for releasing said one-way means to allow pivotal movement of said pivoted clamping means away from said leg engaging means to facilitate release of the leg of the animal.

2. An animal leg restraining means as claimed in claim 1 wherein the one-way means comprises a wrapped spring clutch means and said releasing means comprises a sleeve rotatably mounted on said spring clutch in such a manner that rotation of said sleeve means in a predetermined direction causes release of said spring clutch to allow pivotal movement of said clamping means away from said leg engaging means.

3. An animal leg restraining means substantially as hereinbefore described with reference to Figures 9 and 10 of the accompanying drawings.

WOOL RESEARCH AND DEVELOPMENT CORPORATION

By its attorneys
BALDWIN, SON & CAREY

PATENT OFFICE

Alan Patent 2/2461 Page 20 of 44 printed on Monday 20th August 2007

FIG. 1.

WOOL RESEARCH AND
DEVELOPMENT CORPORATIO
By Their Attorneys
BALDWIN, SON & CAREY

Aust Patent 272481 Page 41 of 44 printed on Monday 20th August 2007

272481

FIG. 2.

WOOL RESEARCH AND DEVELOPMENT CORPORATION
By Their Attorneys
BALDWIN, SON & CAREY

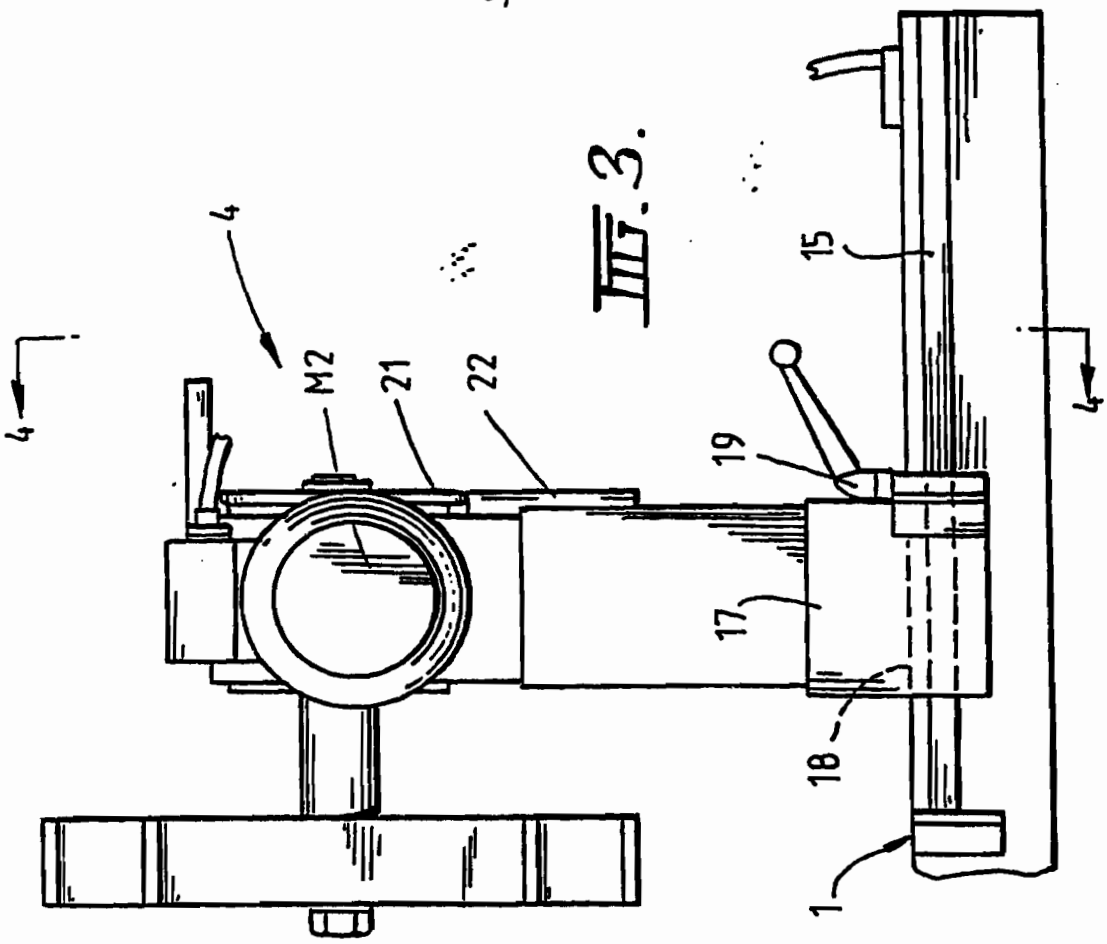

FIG. 3.

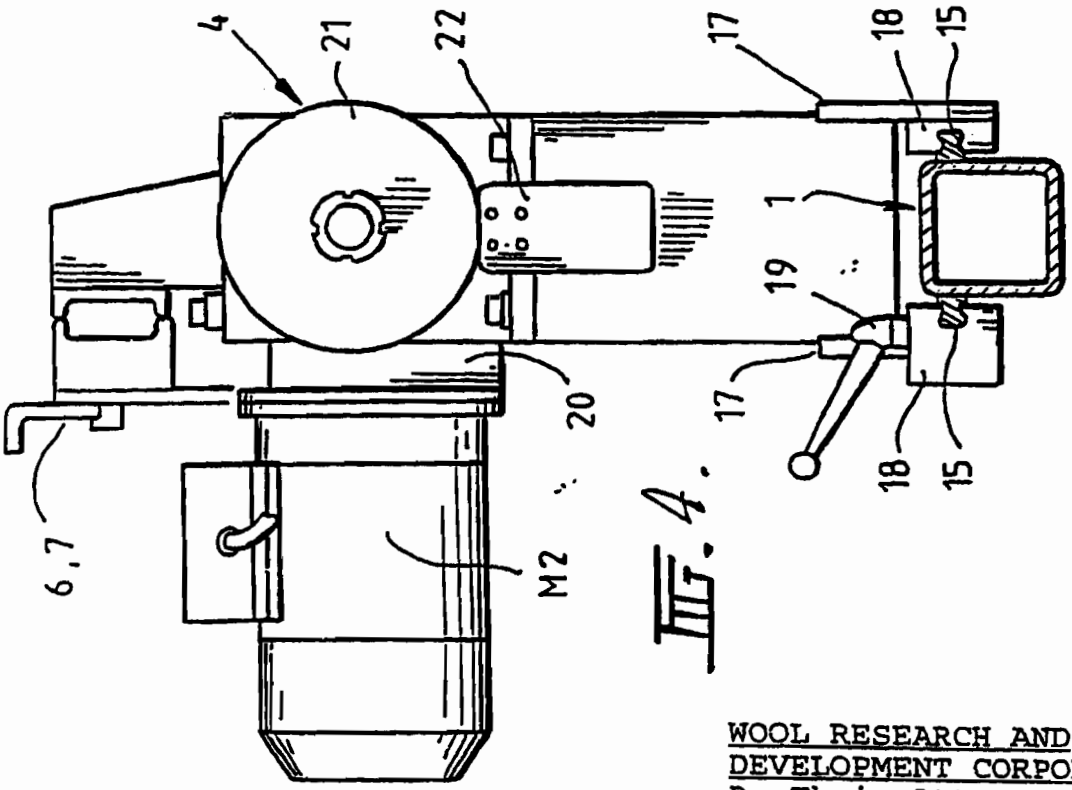

FIG. 4.

WOOL RESEARCH AND
DEVELOPMENT CORPORATION
By Their Attorneys
BALDWIN, SON & CAREY

New Zealand Patent 272481 Page 29 of 44 printed on Monday 20th August 2007

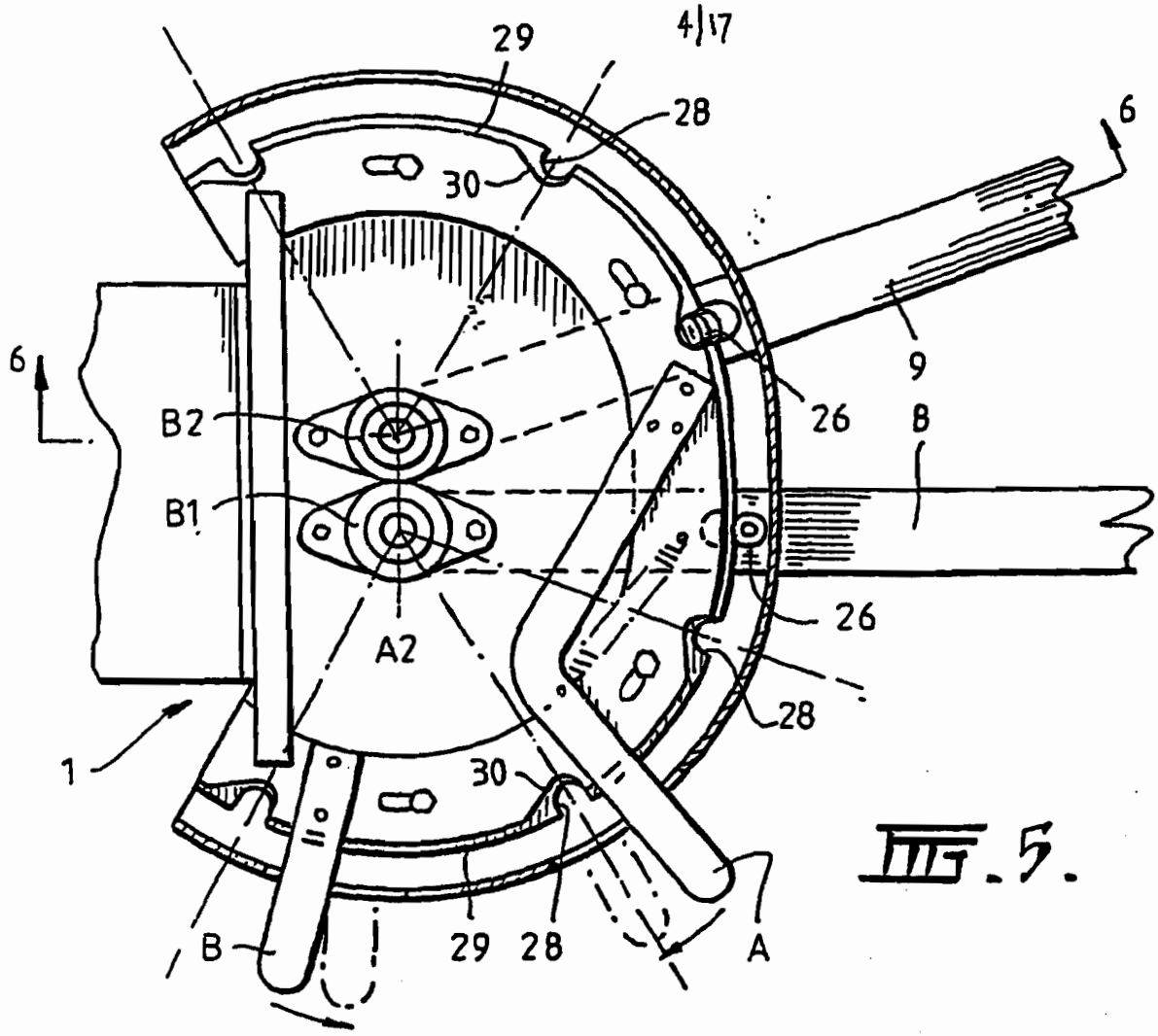

FIG. 5.

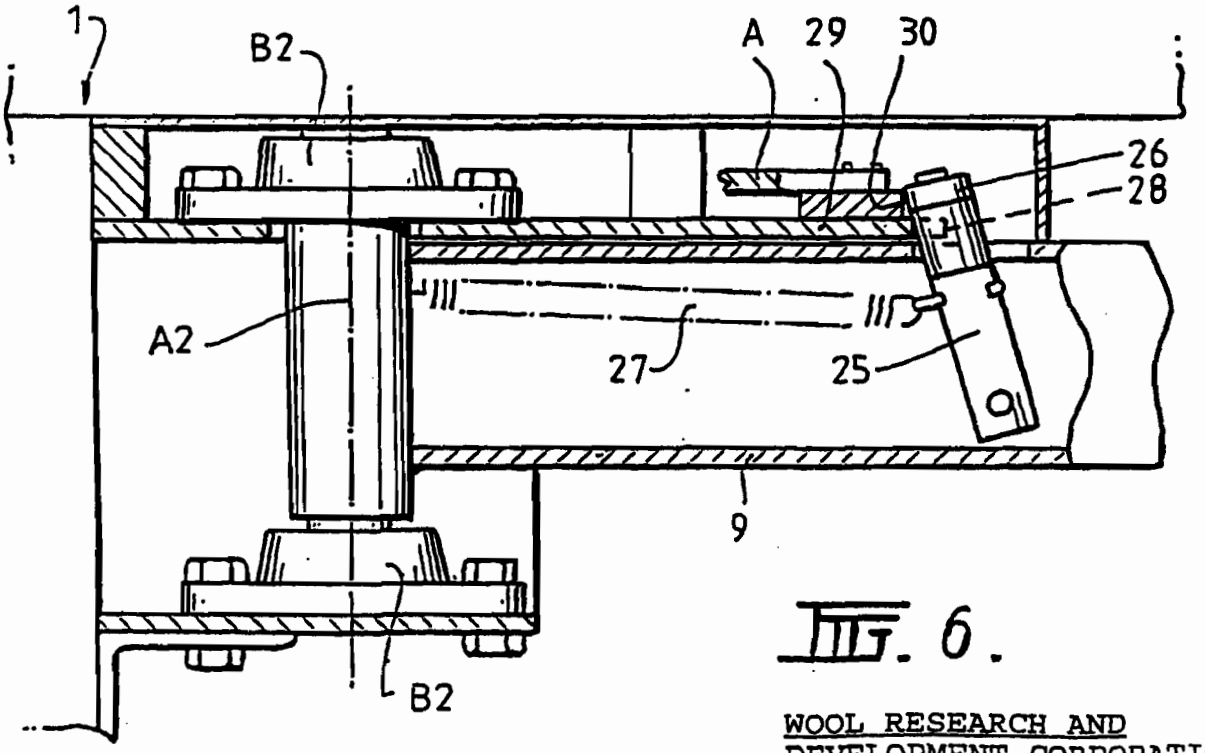

FIG. 6.

WOOL RESEARCH AND
DEVELOPMENT CORPORATION
By Their Attorneys
BALDWIN, SON & CAREY

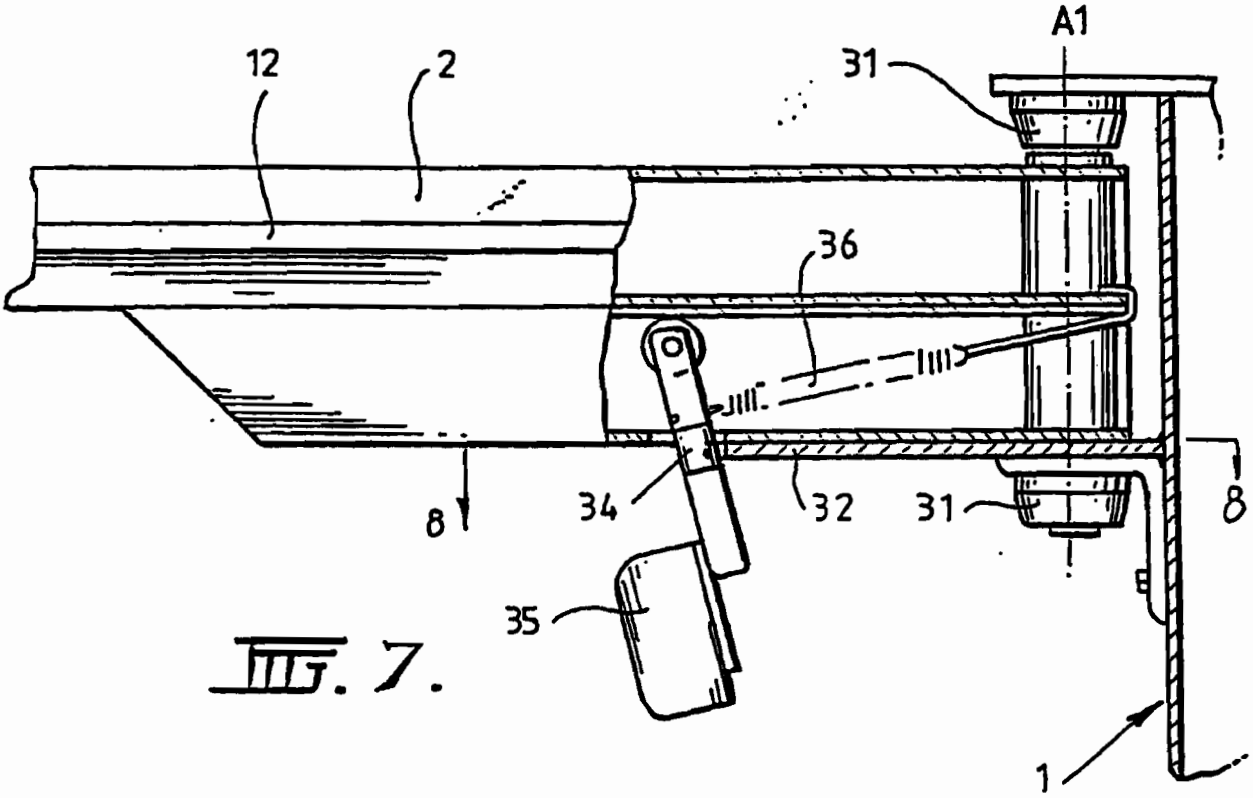

FIG. 7.

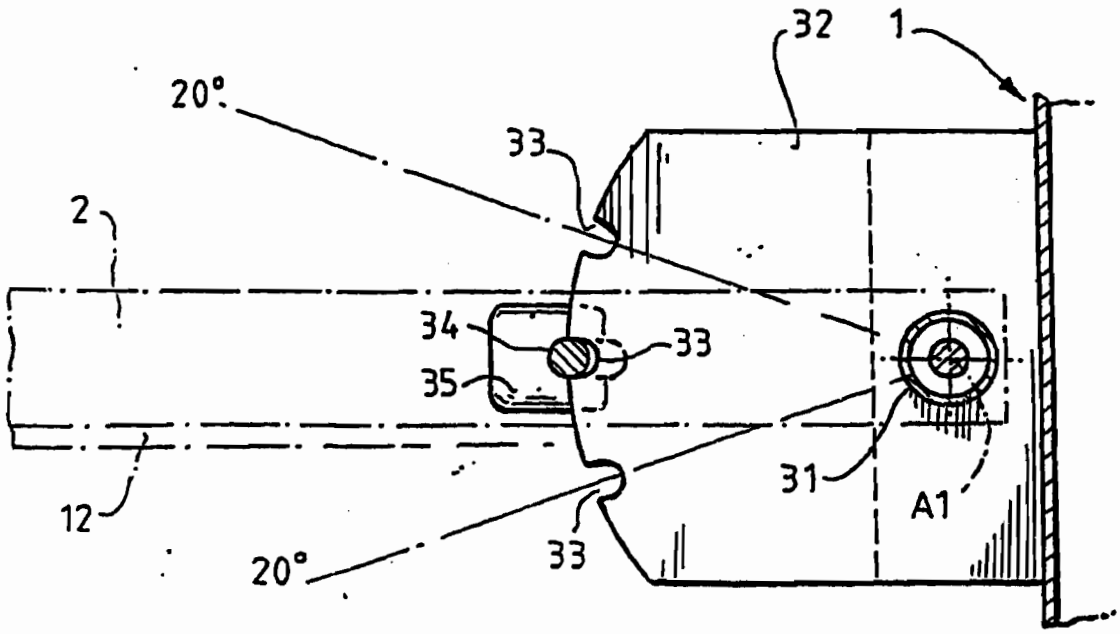

FIG. 8.

WOOL RESEARCH AND
DEVELOPMENT CORPORATION
By Their Attorneys
BALDWIN, SON & CAREY

New Zealand Patent 272481 Page 01 of 44 printed on Monday 20th August 2007

FIG. 9

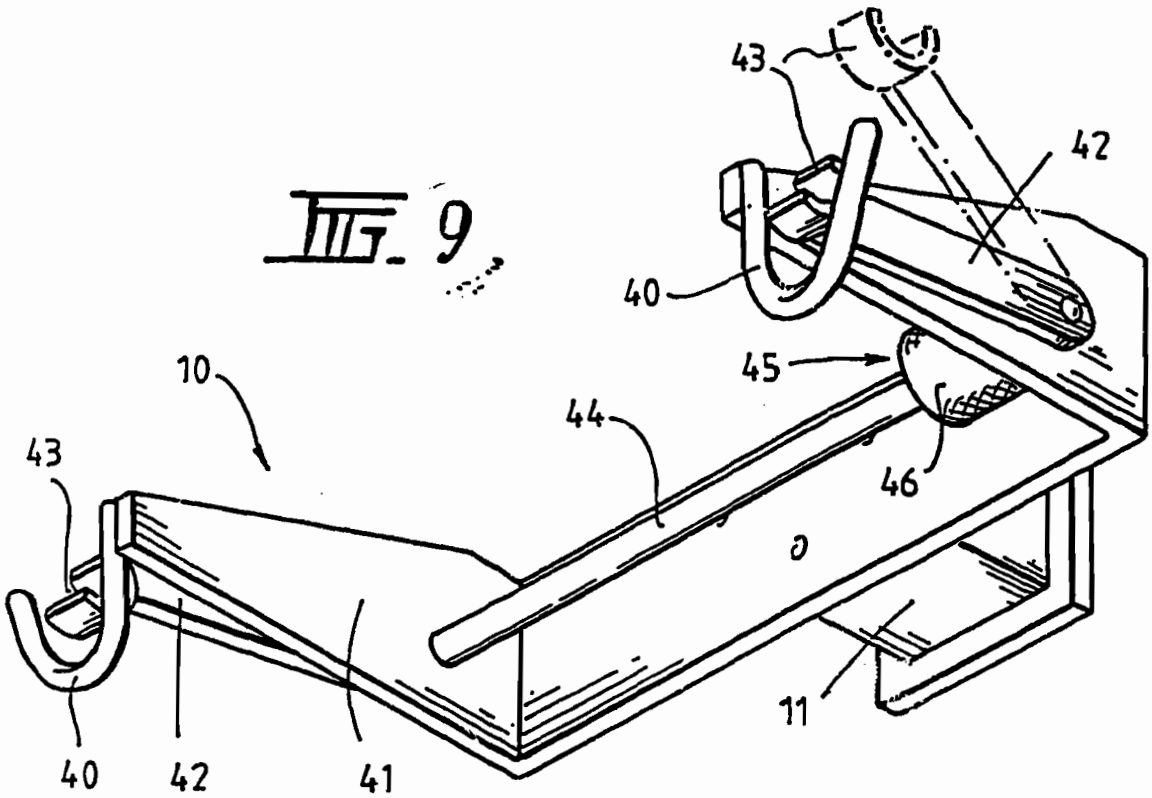

FIG. 10.

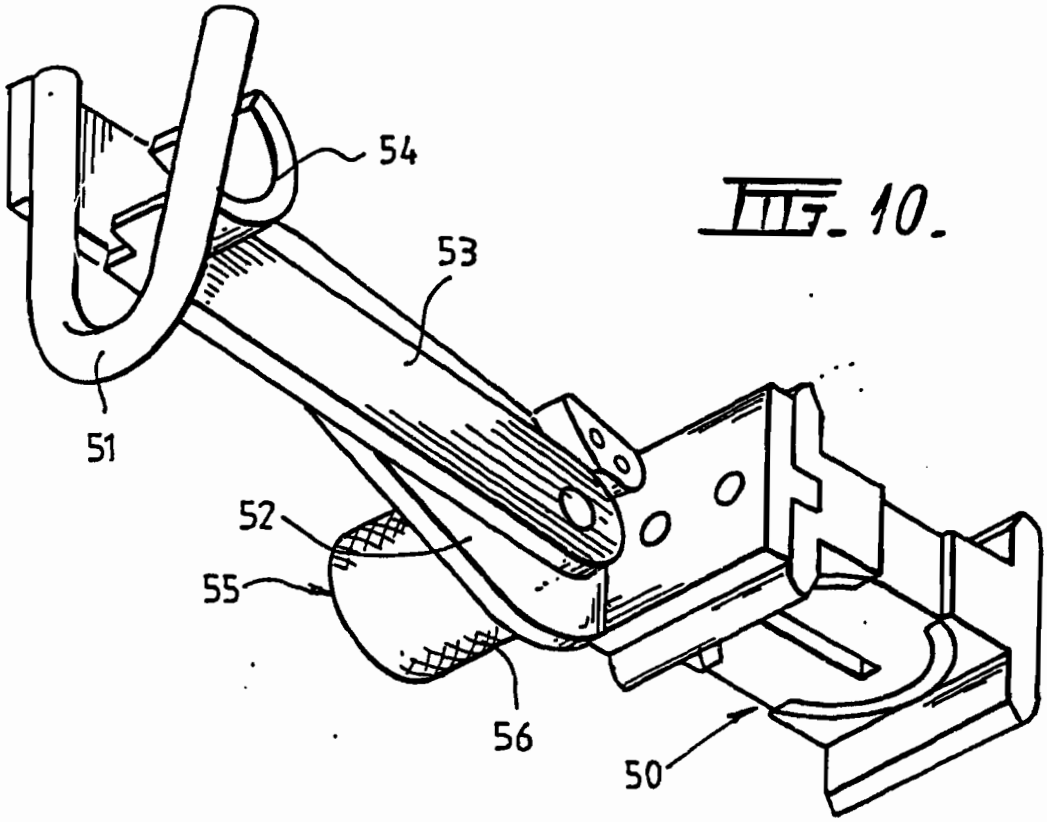

WOOL RESEARCH AND
DEVELOPMENT CORPORATION
By Their Attorneys
BALDWIN, SON & CAREY

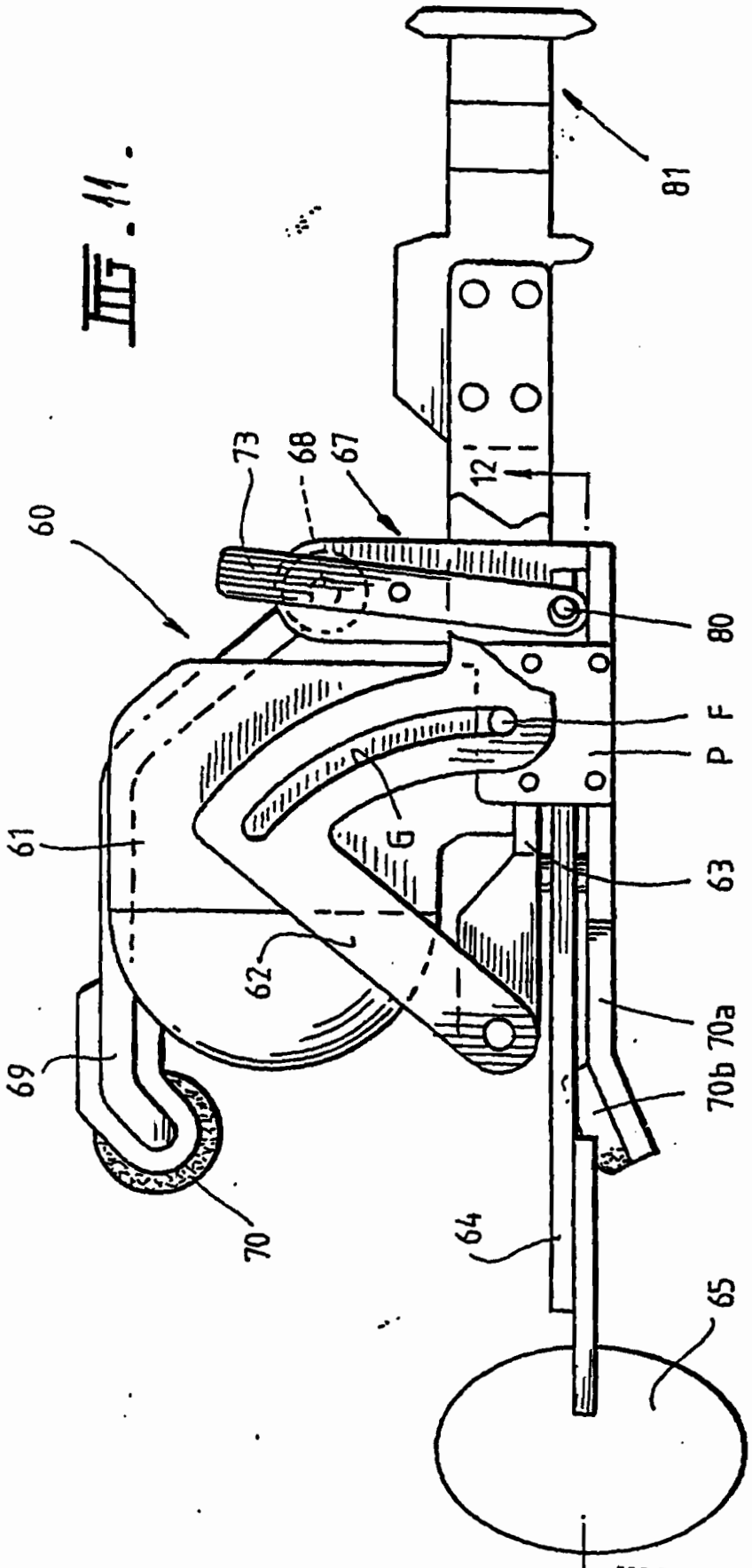

FIG. 11.

WOOL RESEARCH AND
DEVELOPMENT CORPORATION
By Their Attorneys
BALDWIN, SON & CAREY

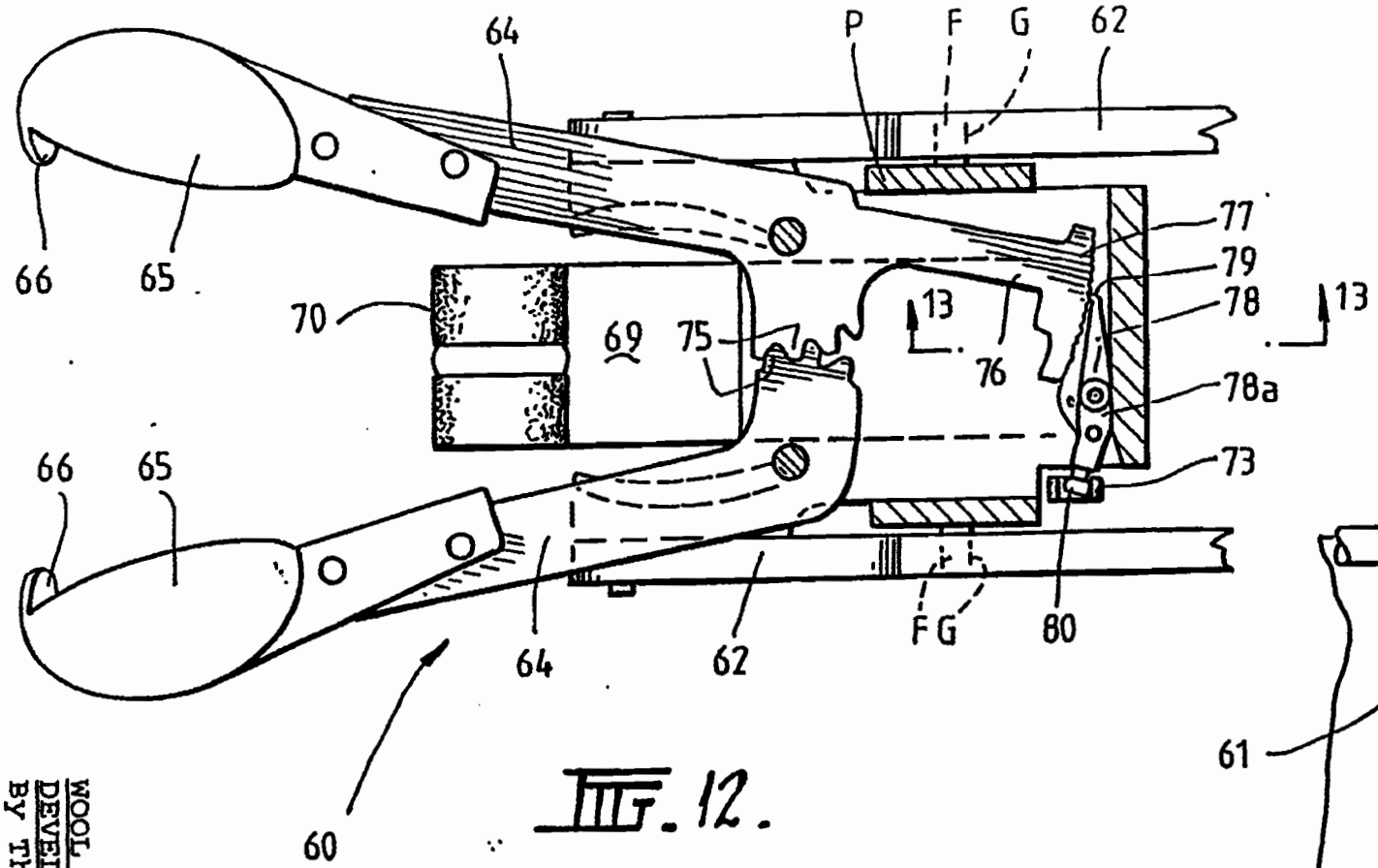

FIG. 12.

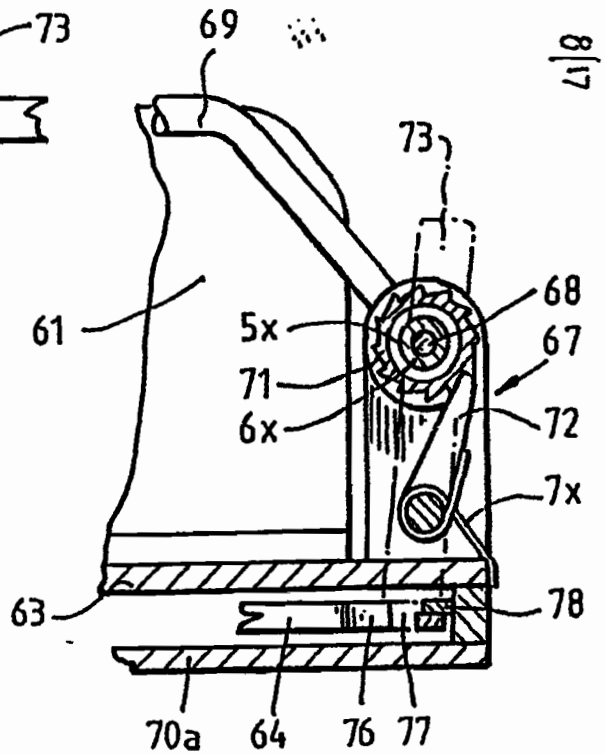

FIG. 13.

WOOL RESEARCH AND
DEVELOPMENT CORPORATION
By Their Attorneys
BALDWIN, SON & CAREY

272481

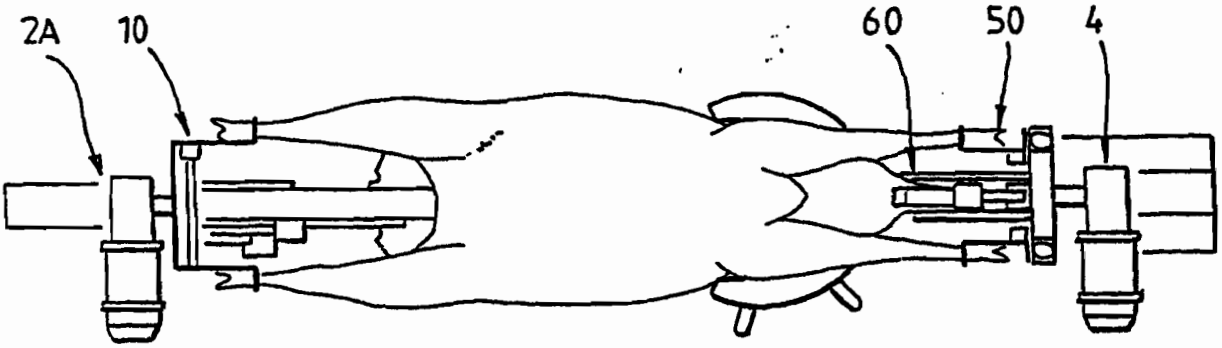

FIG. 14. Shearing position 1

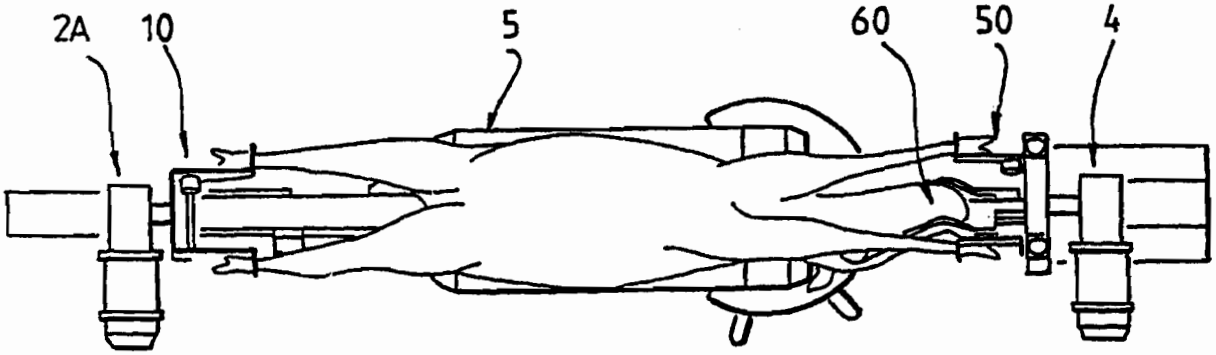

FIG. 15. Shearing position 2

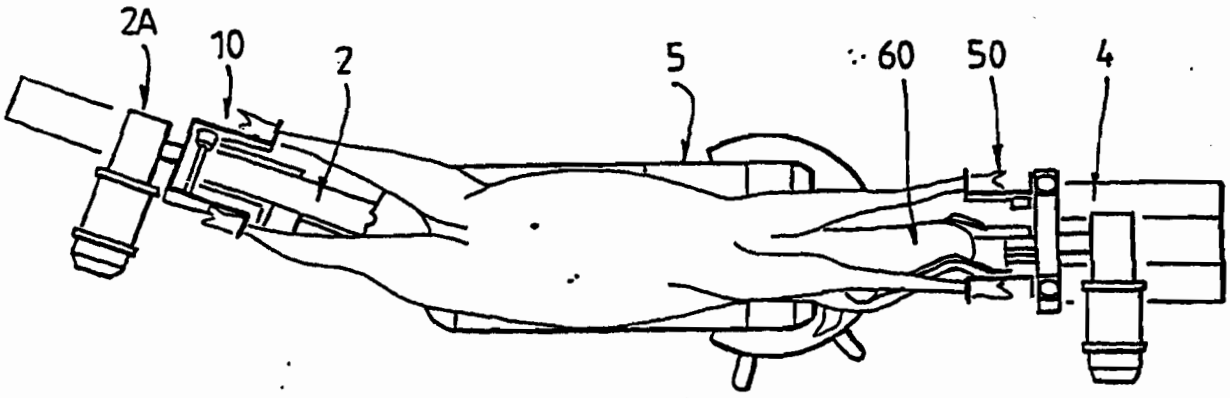

FIG. 16. Shearing position 3

WOOL RESEARCH AND
DEVELOPMENT CORPORATION
By Their Attorneys
BALDWIN, SON & CAREY

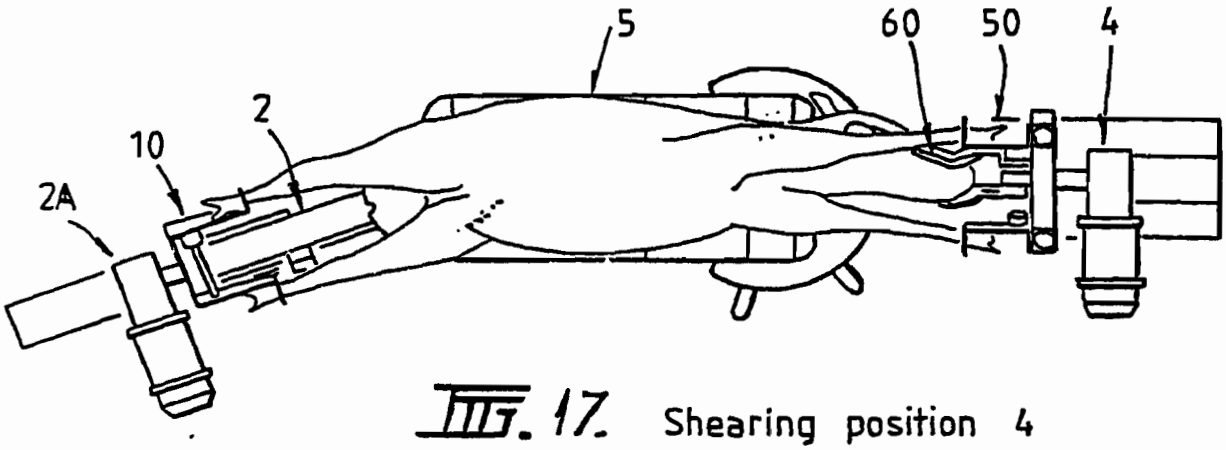

FIG. 17. Shearing position 4

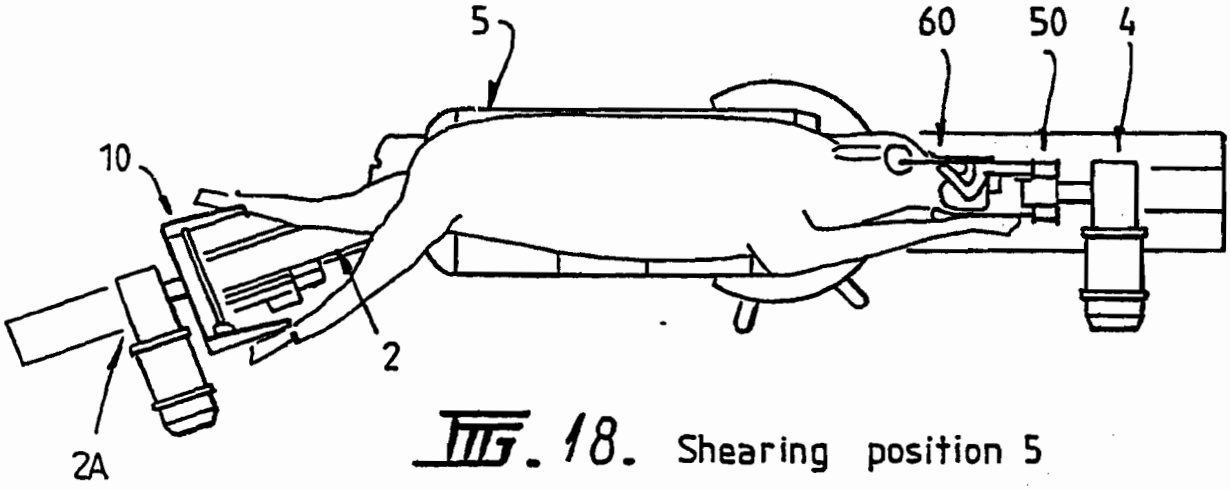

FIG. 18. Shearing position 5

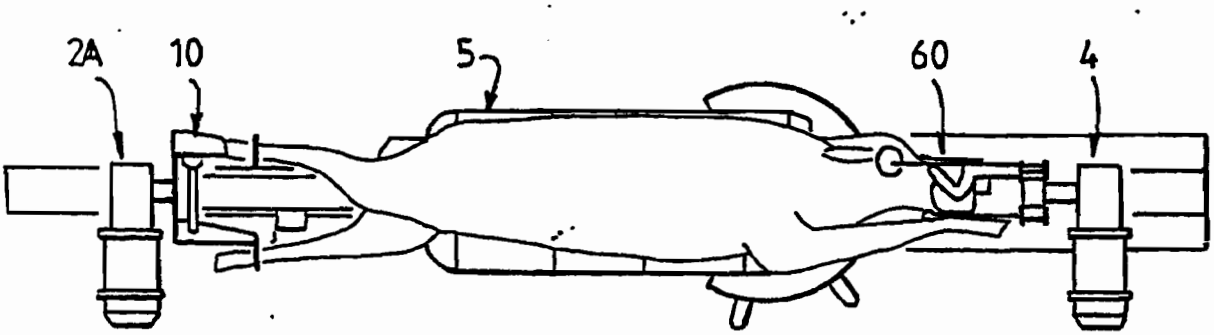

FIG. 19. Shearing position 6

WOOL RESEARCH AND
DEVELOPMENT CORPORATION
By Their Attorneys
BALDWIN, SON & CAREY

New Zealand Patent 272481 Page 37 of 44 printed on Monday 20th August 2007

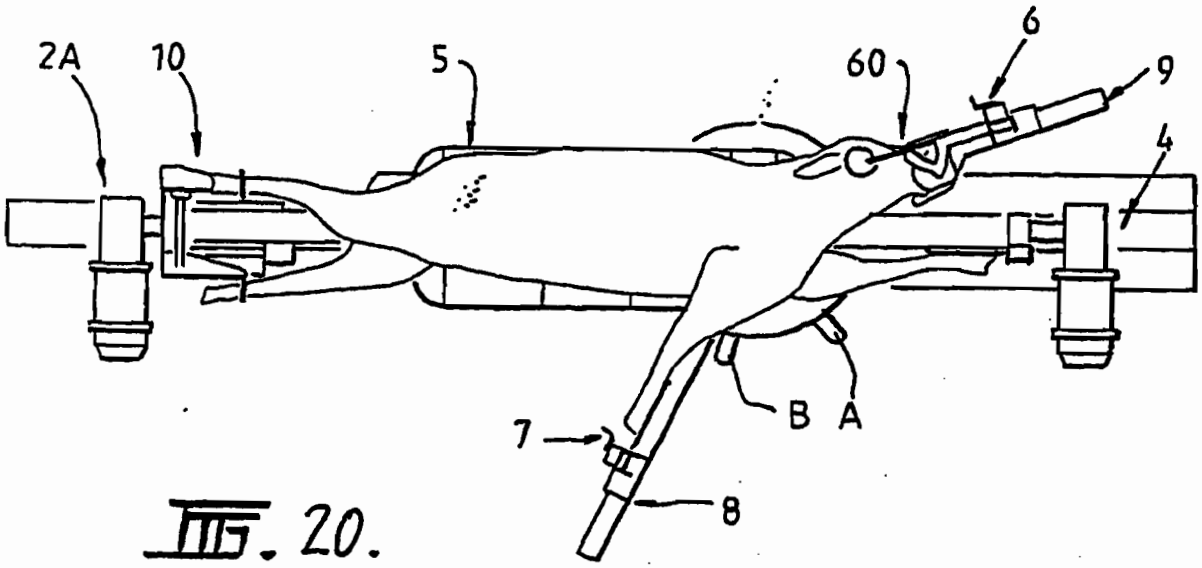

FIG. 20.

Shearing position 7

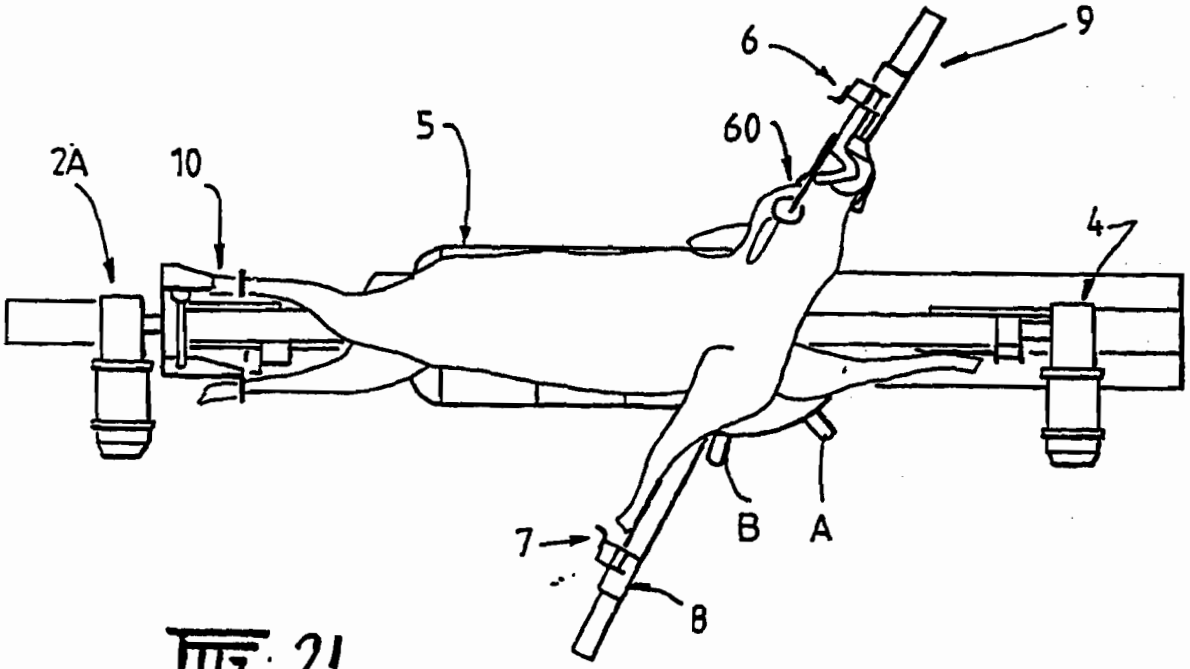

FIG. 21.

Shearing position 8

WOOL RESEARCH AND DEVELOPMENT CORPORATION

By Their Attorneys
BALDWIN, SON & CAREY

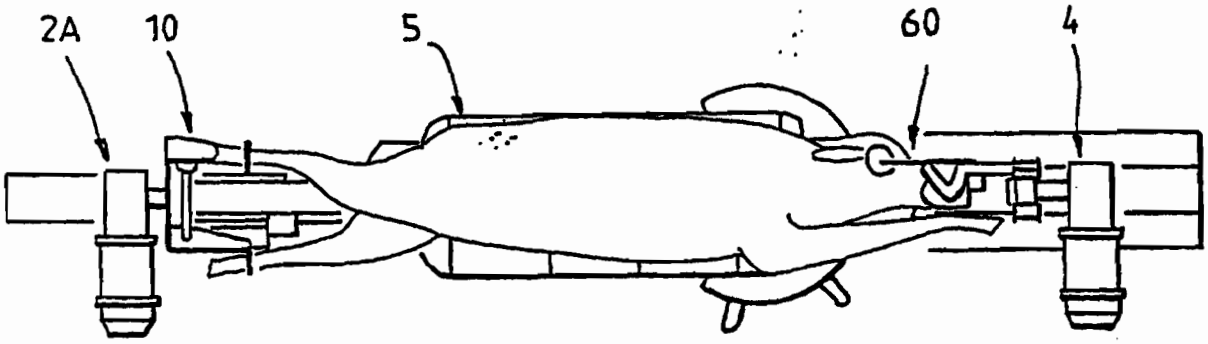

FIG. 22. Shearing position 9

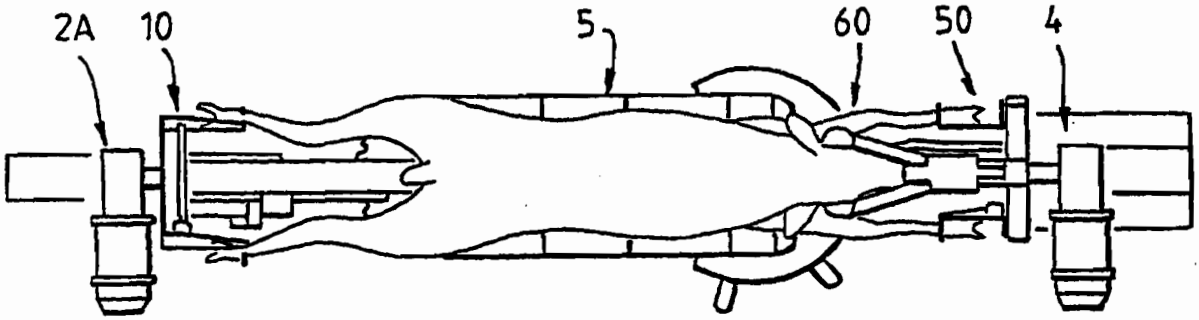

FIG. 23. Shearing position 10

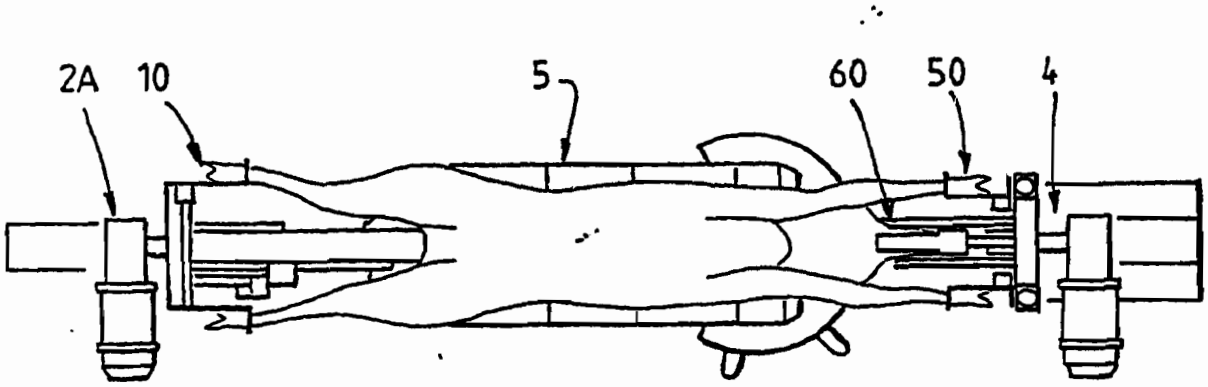

FIG. 24. Shearing position 11

WOOL RESEARCH
AND DEVELOPMENT CORPORATION
By Their Attorneys
BALDWIN, SON & CAREY

NEW Complete Patent 272481 Filed 27 August 1927 Page 20 of 24 printed on Monday 4th August 2007

New Zealand Patent 212481 Page 39 of 44 printed on Monday 20th August 2007

212481

FIG. 25.

WOOL RESEARCH
AND DEVELOPMENT CORPORATI
By Their Attorneys
BALDWIN, SON & CAREY

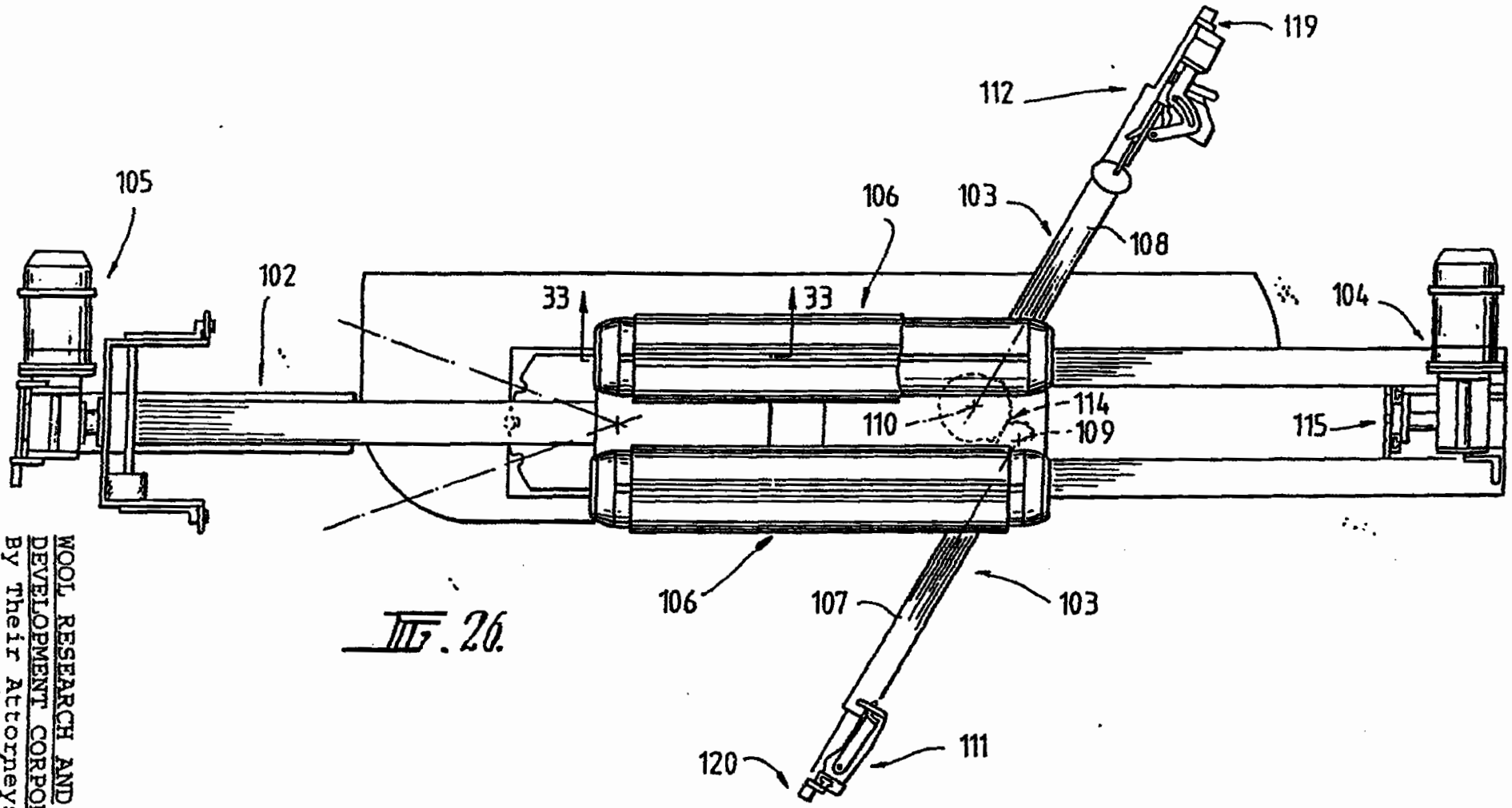

FIG. 26.

WOOL RESEARCH AND
DEVELOPMENT CORPORATION
By Their Attorneys
BALDWIN SON & CAREY

272481

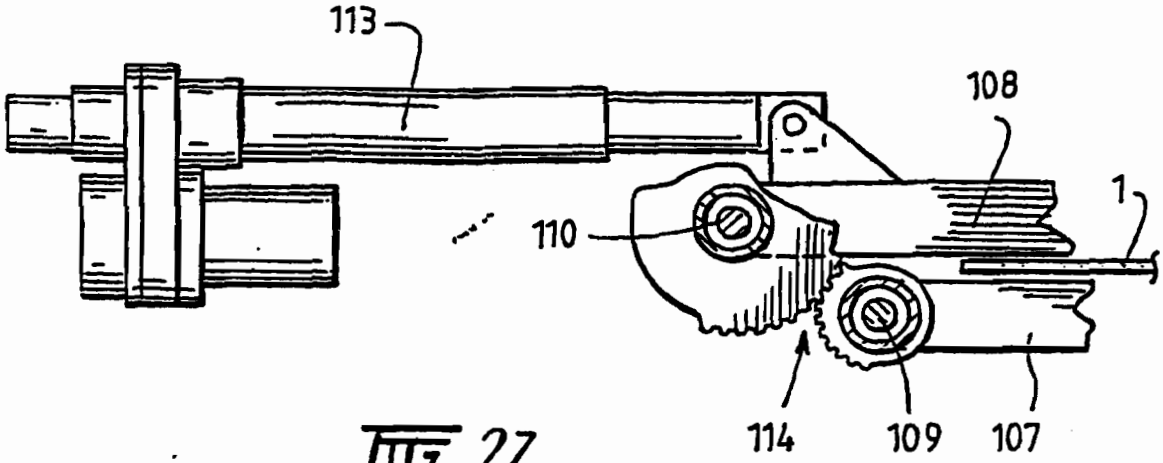

FIG. 27.

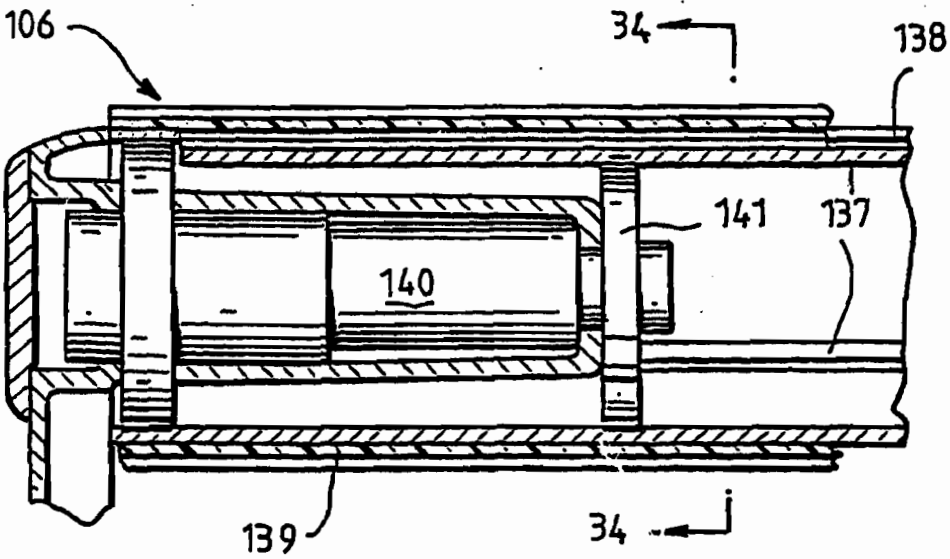

FIG. 33.

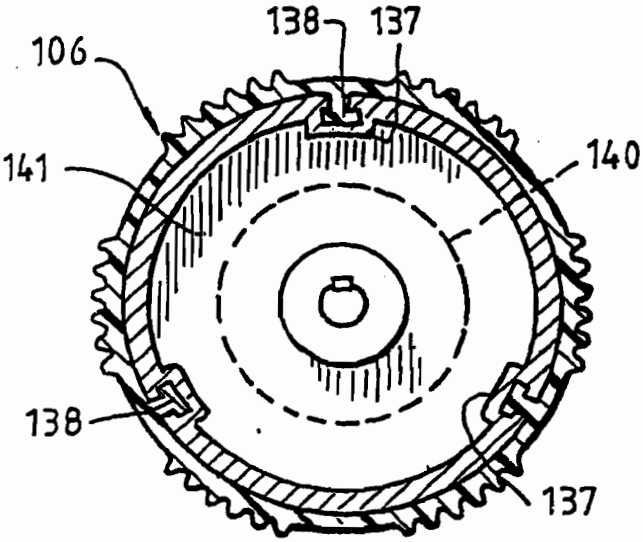

FIG. 34.

WOOL RESEARCH AND
DEVELOPMENT CORPORATION
By Their Attorneys
BALDWIN, SON & CAREY

New Zealand Patent 272481 Page 42 of 44 printed on Monday 20th August 2007

272481

16/17

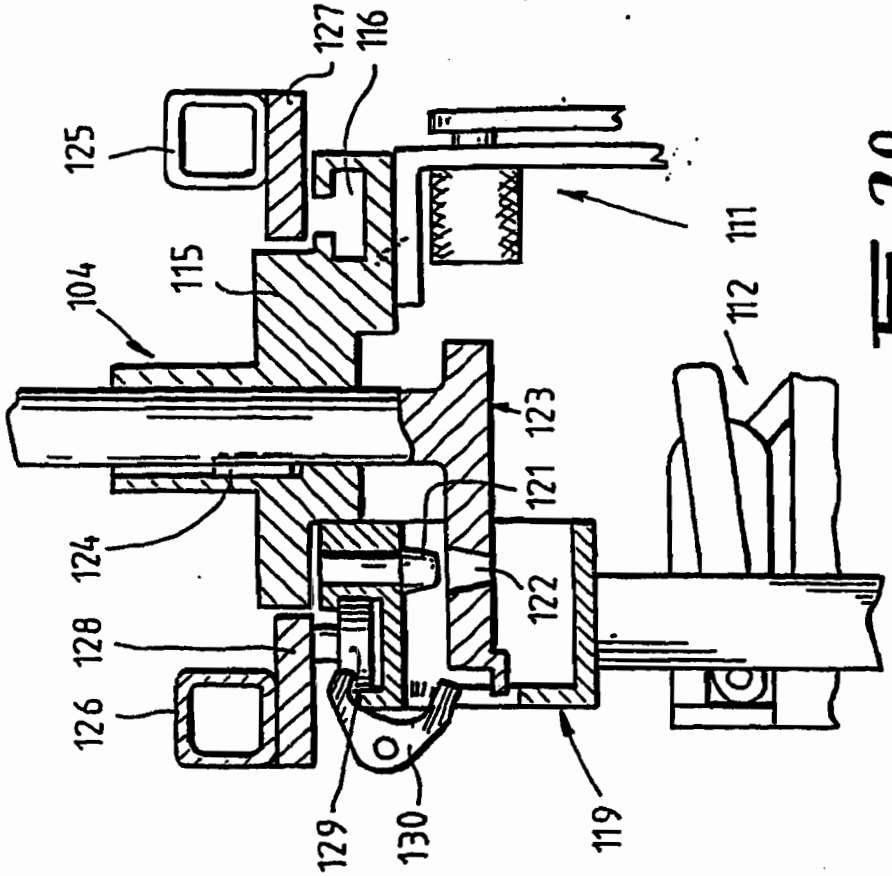

FIG. 29.

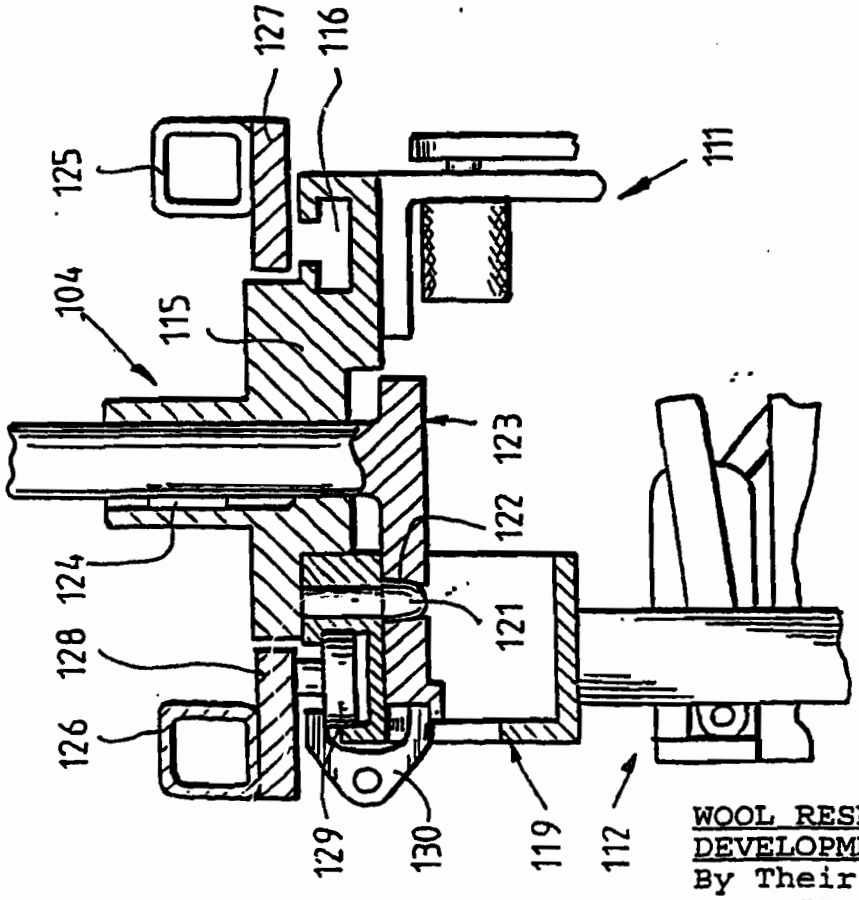

FIG. 28.

WOOL RESEARCH AND
DEVELOPMENT CORPORATION
By Their Attorneys
BALDWIN, SON & CAREY

aidm Patent 272481 Page 43 of 44 printed on Monday 20th August 2007

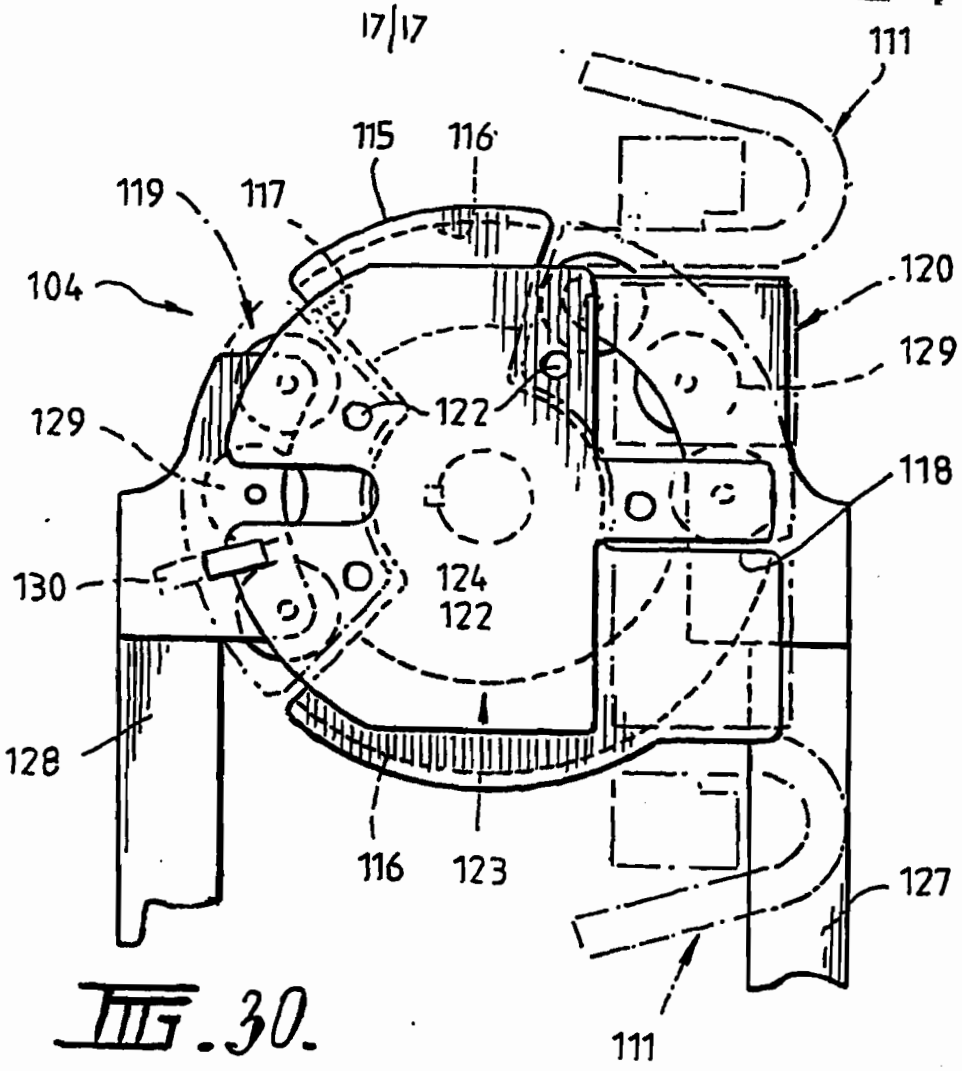

FIG. 30.

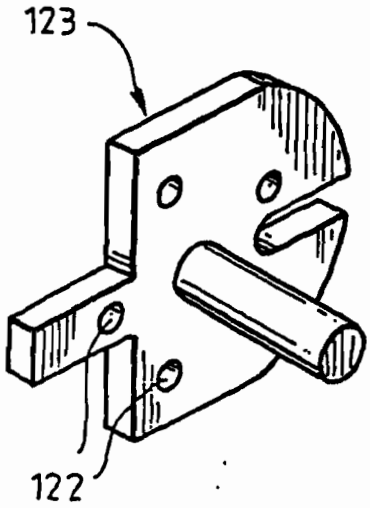

FIG. 31.

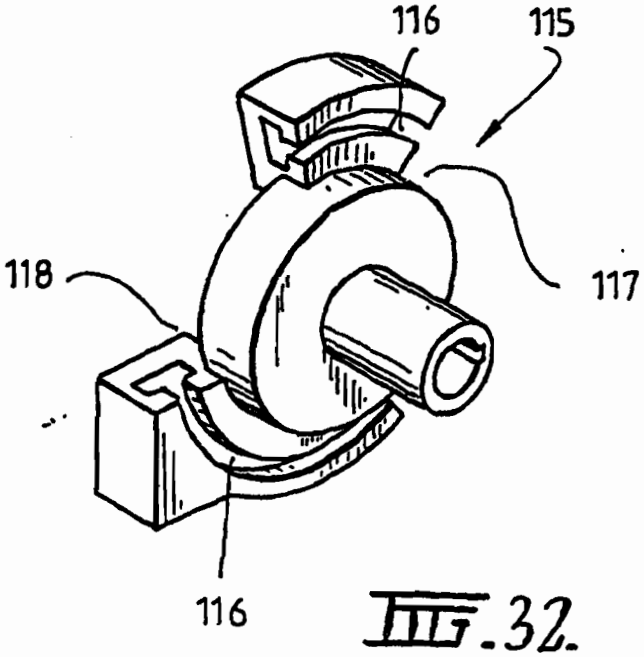

FIG. 32.

WOOL RESEARCH AND
DEVELOPMENT CORPORATION
By Their Attorneys
BALDWIN, SON & CAREY